VER : 1A

BOM P/N	Description

ZQ9 SYSTEM BLOCK DIAGRAM

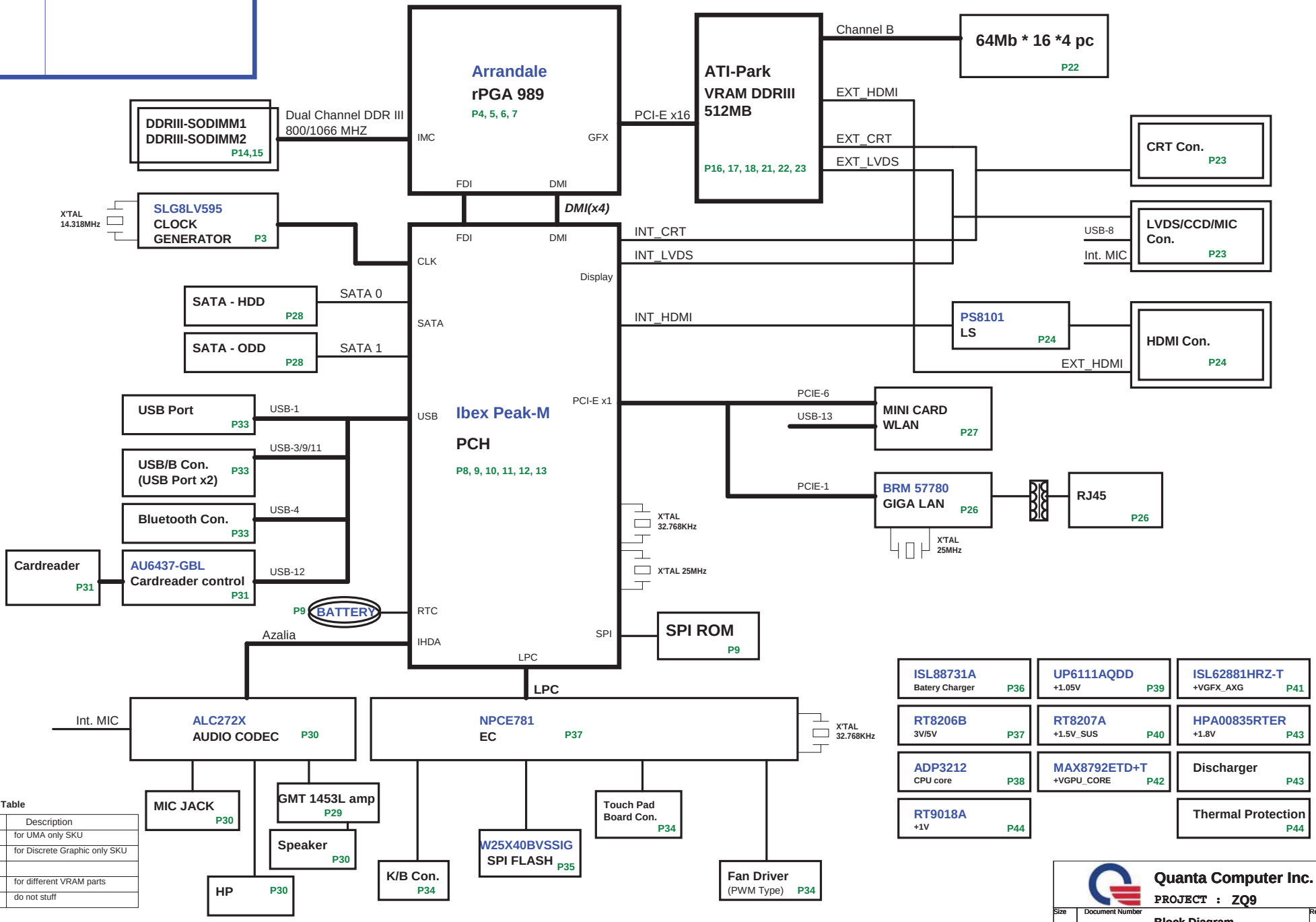

BOM Option Table

Reference	Description
IV@	for UMA only SKU
EV@	for Discrete Graphic only SKU
VRAM@	for different VRAM parts
*	do not stuff

Quanta Computer Inc.

PROJECT : ZQ9

Size	Document Number	Rev
	Block Diagram	1A

Date: Tuesday, June 22, 2010 Sheet 1 of 45

GPU PWR CTRL Option 1 (Default/ VDDR3 before VDDC)

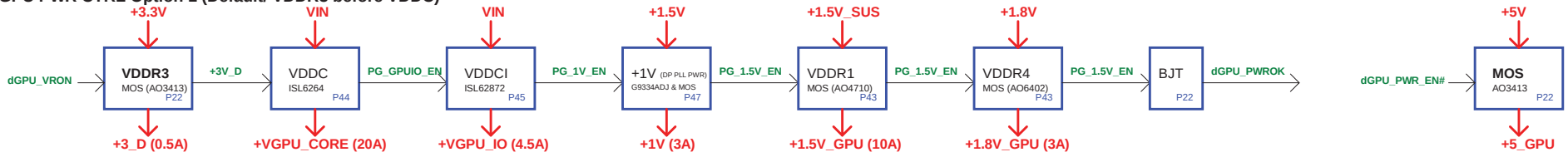

GPU PWR CTRL Option 2 (VDDR3 after VDDR1)

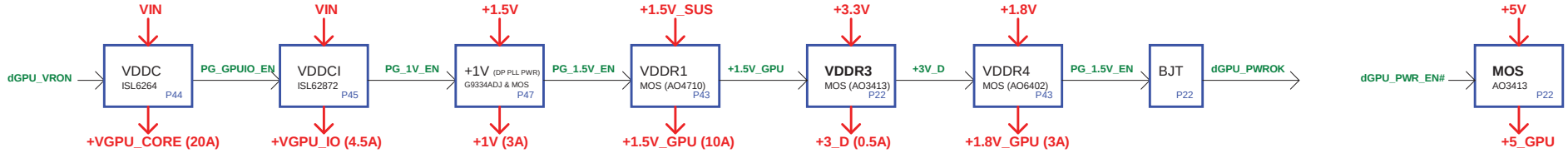

Power States

POWER PLANE	VOLTAGE	DESCRIPTION	CONTROL SIGNAL	ACTIVE IN
VIN	+10V~+19V	MAIN POWER	ALWAYS	ALWAYS
+VCCRTC	+3V~+3.3V	RTC POWER	ALWAYS	ALWAYS
+3VPCU	+3.3V	EC POWER	ALWAYS	ALWAYS
+5VPCU	+5V	CHARGE POWER	ALWAYS	ALWAYS
+15V	+15V	CHARGE PUMP POWER	ALWAYS	ALWAYS
+3V_S5	+3.3V	LAN/BT/CIR POWER	S5_ON	S0-S5
+5V_S5	+5V	USB POWER	S5_ON	S0-S5
+5V	+5V	HDD/ODD/Codec/TP/CRT/HDMI POWER	MAINON	S0
+3V	+3.3V	PCH/GPU/Peripheral component POWER	MAINON	S0
+1.5VSUS	+1.5V	CPU/SODIMM CORE POWER	SUSON	S0-S3
+0.75V_DDR_VTT	+0.75V	SODIMM Termination POWER	MAINON	S0
+VGFX_AXG	variation	Internal GPU POWER	GFX_ON	S0
+1.8V	+1.8V	CPU/PCH/Braidwood POWER	MAINON	S0
+1.5V	+1.5V	MINI CARD/NEW CARD POWER	MAINON	S0
+1.1V_VTT	+1.05V or +1.1V	CPU VTT POWER	MAINON	S0
+1.05V	+1.05V	PCH CORE POWER	MAINON	S0
+VCC_CORE	variation	CPU CORE POWER	VRON	S0
LCDVCC	+3.3V	LCD POWER	LVDS_VDDEN	S0
+5V_GPU	+5V	SWITCHABLE PWM IC POWER	dGPU_PWR_EN#	Discrete enable
+GPU_CORE	+0.9V~+1.1V	GPU CORE POWER	+3V_D	Discrete enable
+GPU_IO	+0.9V~+1.1V	GPU I/O POWER	PG_GPUIO_EN	Discrete enable
+1.5V_GPU	+1.5V	VRAM CORE POWER	PG_1.5V_EN	Discrete enable
+1.8V_GPU	+1.8V	GPU_CRE/LVDS/PLL POWER	+1.5V_GPU	Discrete enable
+1V	+1V	DP/PEG POWER	PG_1V_EN	Discrete enable

Thermal Follow Chart

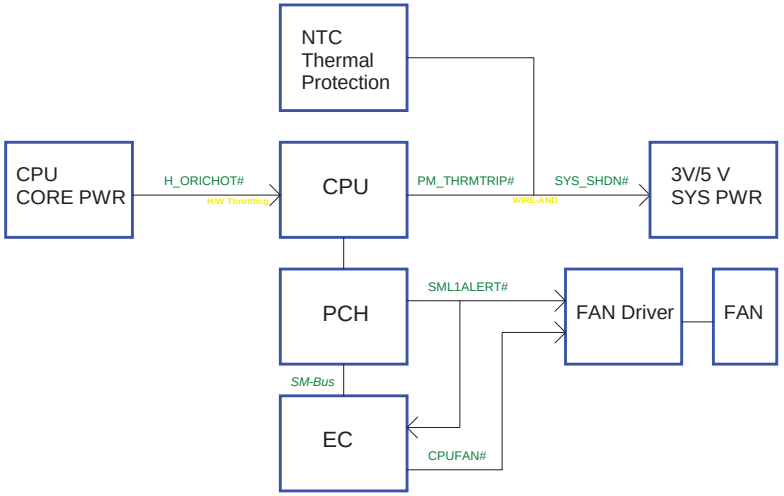

Quanta Computer Inc.

PROJECT : ZQ9

Size	Document Number	Rev
	PWR Status & GPU PWR CRL & THRM	1A

Date: Tuesday, June 22, 2010 Sheet 2 of 45

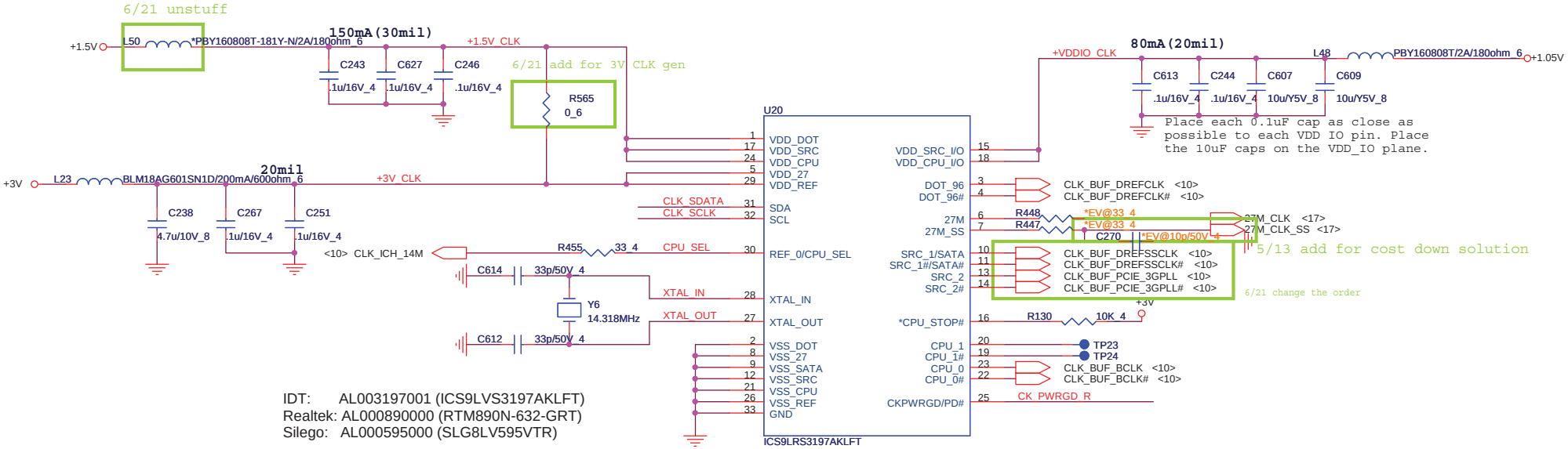

IDT: AL003197001 (ICS9LVS3197AKLFT)
Realtek: AL000890000 (RTM890N-632-GRT)
Silego: AL000595000 (SLG8LV595VTR)

CPU_CLK select

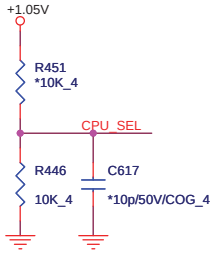

	0	1
CPU_SEL	CPU0/1=133MHz (default)	CPU0/1=100MHz

SMBus

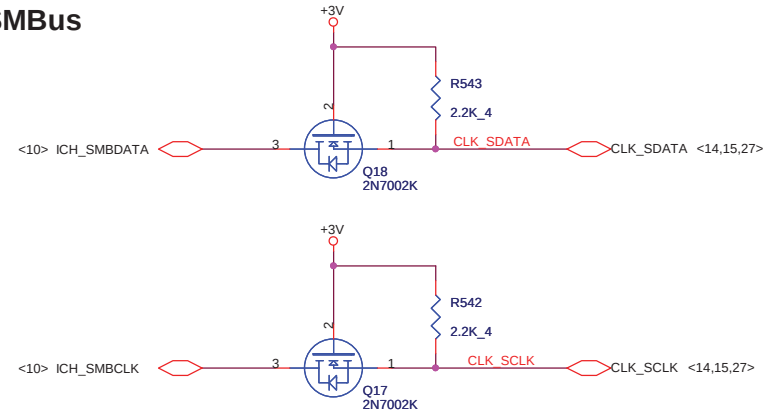

CLK Enable

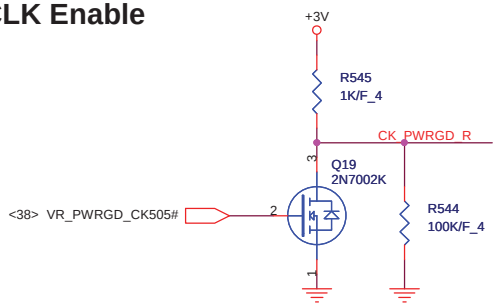

Quanta Computer Inc.

PROJECT : ZQ9

Size	Document Number	Rev
	Clock Generator	1A

Date: Tuesday, June 22, 2010 Sheet 3 of 45

AUBURNDALE/CLARKSFIELD PROCESSOR (DMI,PEG,FDI)

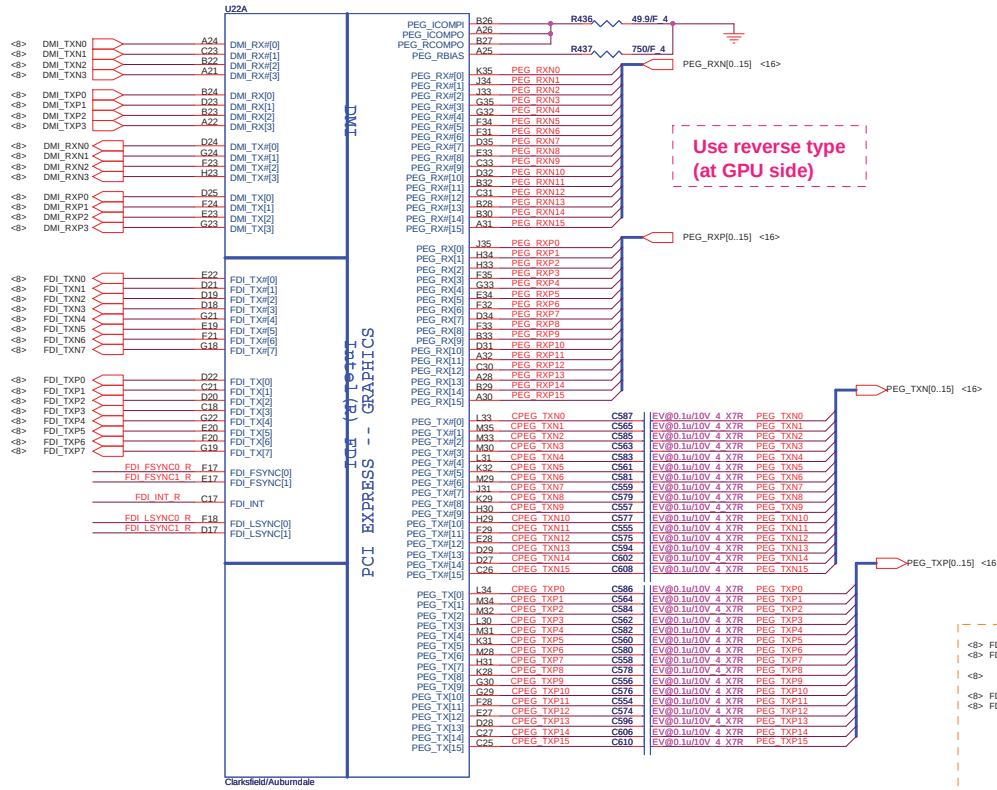

AUBURNDALE/CLARKSFIELD PROCESSOR (CLK,MISC,JTAG)

DPLL_REF_SSCLK and DPLL_REF_SSCLK# can be connected to GND on Arrandale directly if motherboard only supports discrete graphics. If motherboard supports integrated graphics but without eDP, these pins can also be connected to GND directly.

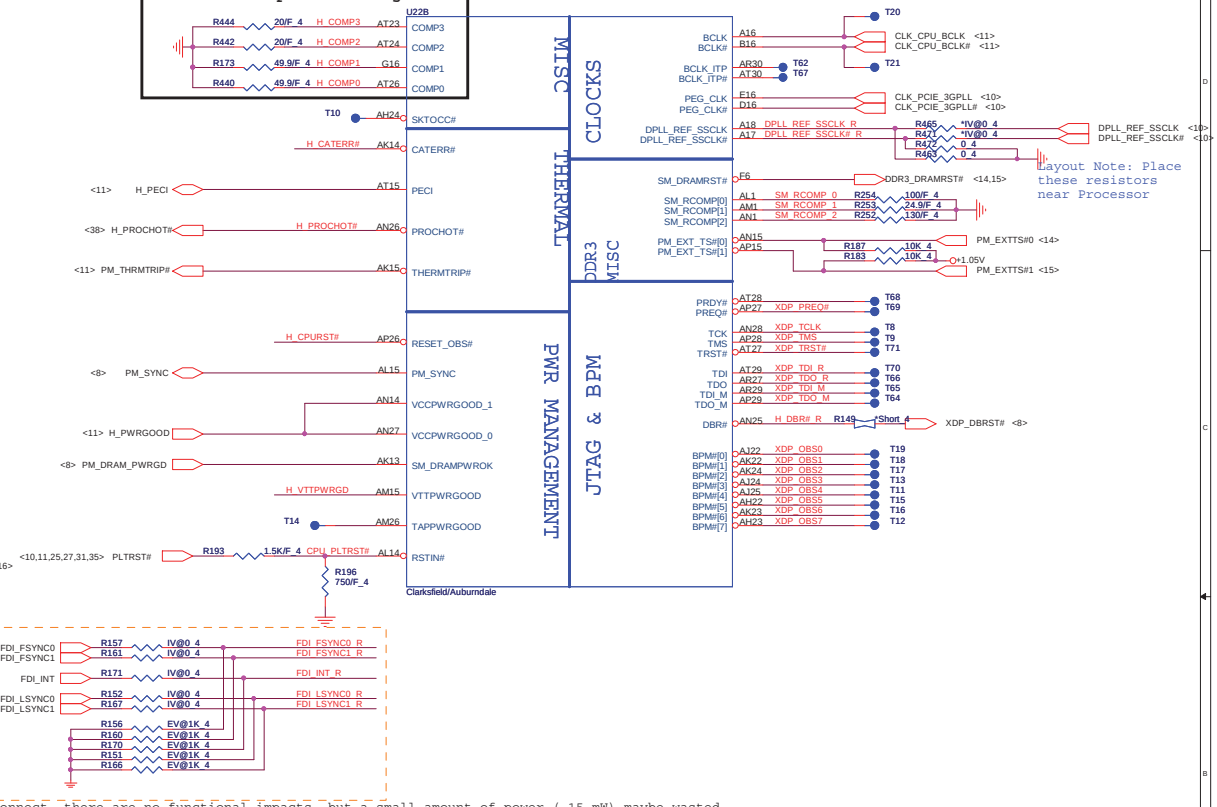

<The GFX_IMON, FDI_FSYNC[0], FDI_FSYNC[1], FDI_LSYNC[0], FDI_LSYNC[1], and FDI_INT>Note that if these signals are left as no connect, there are no functional impacts, but a small amount of power (~15 mW) maybe wasted.

Thermaltrip protect

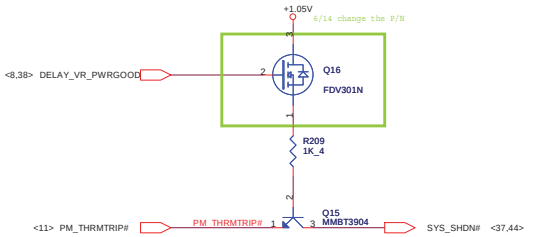

VTT PWR_Good

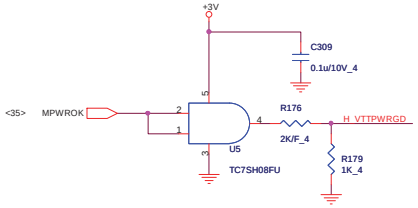

Processor pull-up

5/13 follow ZR7B setting

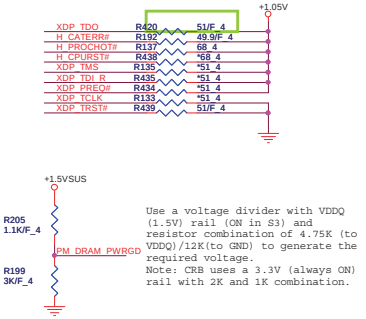

Use a voltage divider with VDDQ (1.5V) rail (ON in S3) and resistor combination of 4.75K (to VDDQ)/12K(to GND) to generate the required voltage.
Note: CRB uses a 3.3V (always ON) rail with 2K and 1K combination.

JTAG MAPPING

5/13 follow ZR7B setting

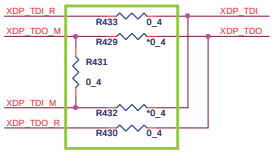

Scan Chain (Default)	STUFF -> R469, R491, R497 NO STUFF -> R489, R490
CPU Only	STUFF -> R490, R491 NO STUFF -> R469, R489, R507
GMCH Only	STUFF -> R489, R507 NO STUFF -> R491, R490, R469

Quanta Computer Inc.

PROJECT : ZQ9

Size	Document Number	Rev
	AUBURNDA 1/4	1A

Date: Tuesday, June 22, 2010 Sheet 4 of 45

AUBURNDALE/CLARKSFIELD PROCESSOR (DDR3)

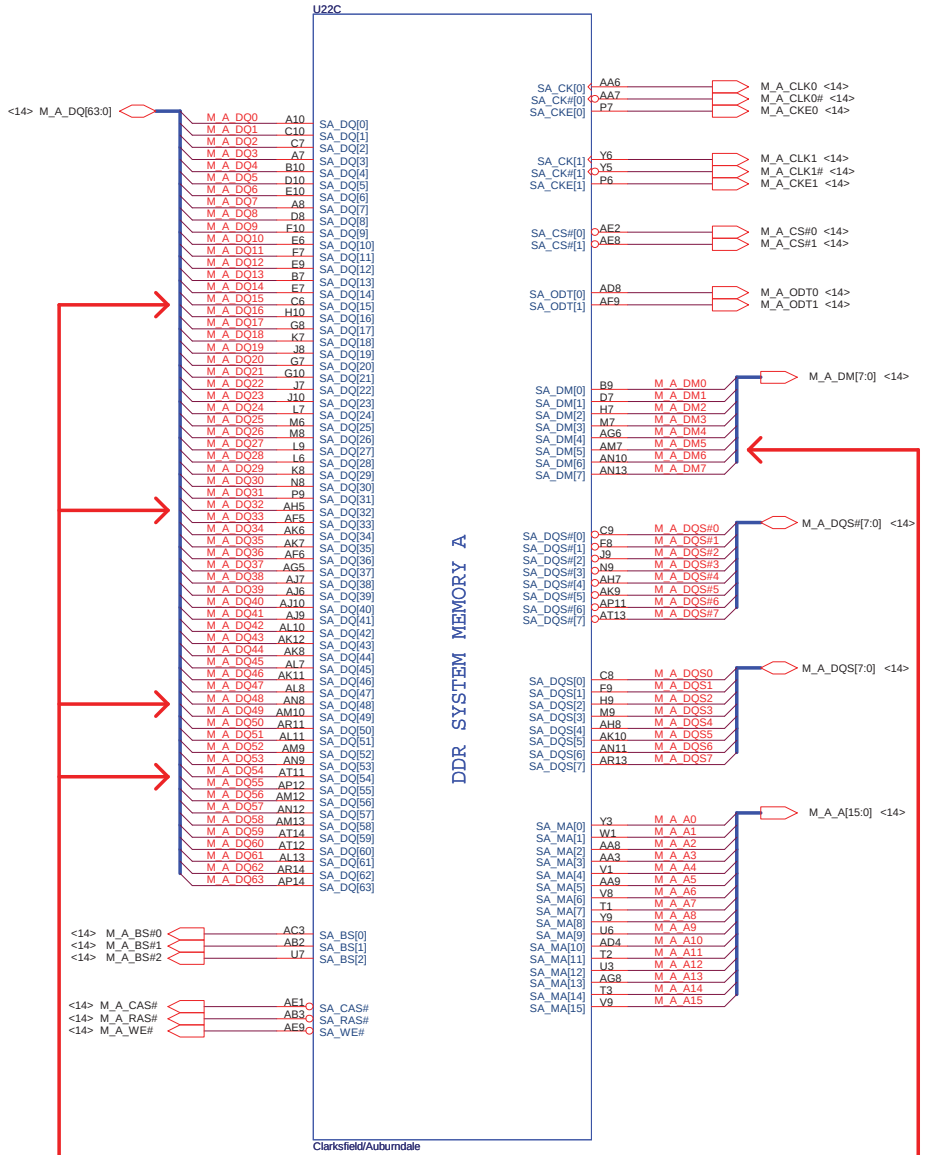

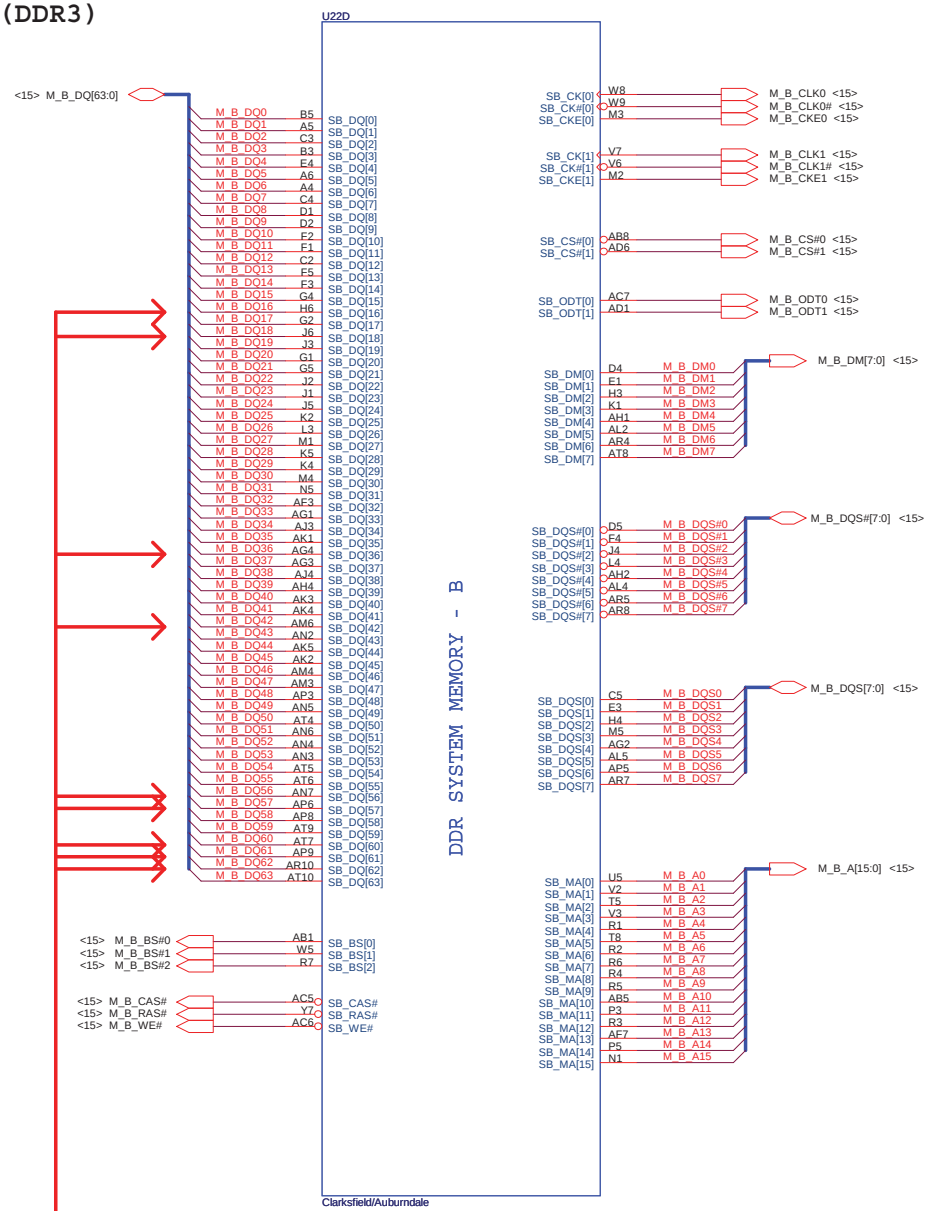

Quanta Computer Inc.

PROJECT : ZQ9

Size	Document Number	Rev
	AUBURNDA 2/4	1A

Date: Tuesday, June 22, 2010 Sheet 5 of 45

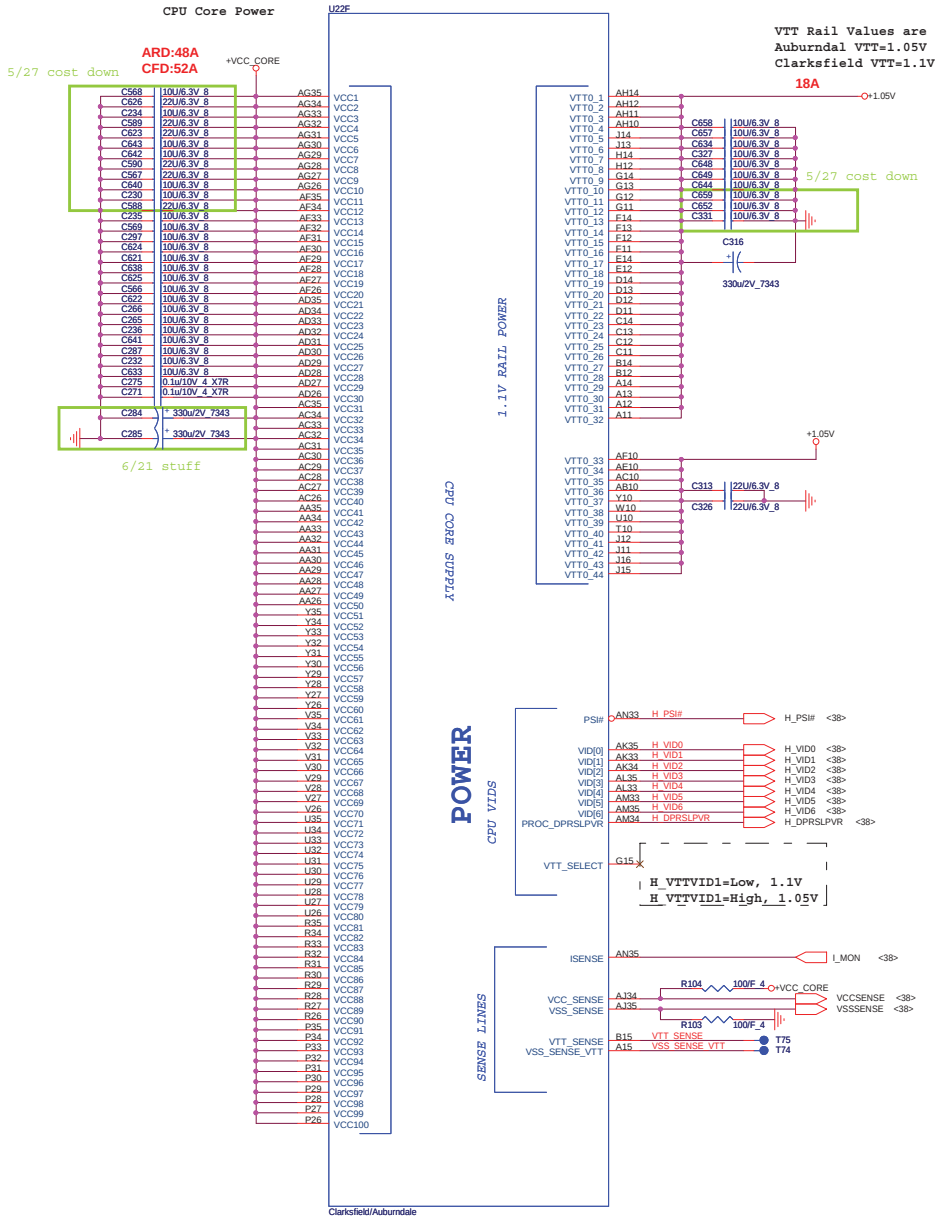

AUBURNDALE/CLARKSFIELD PROCESSOR (POWER)

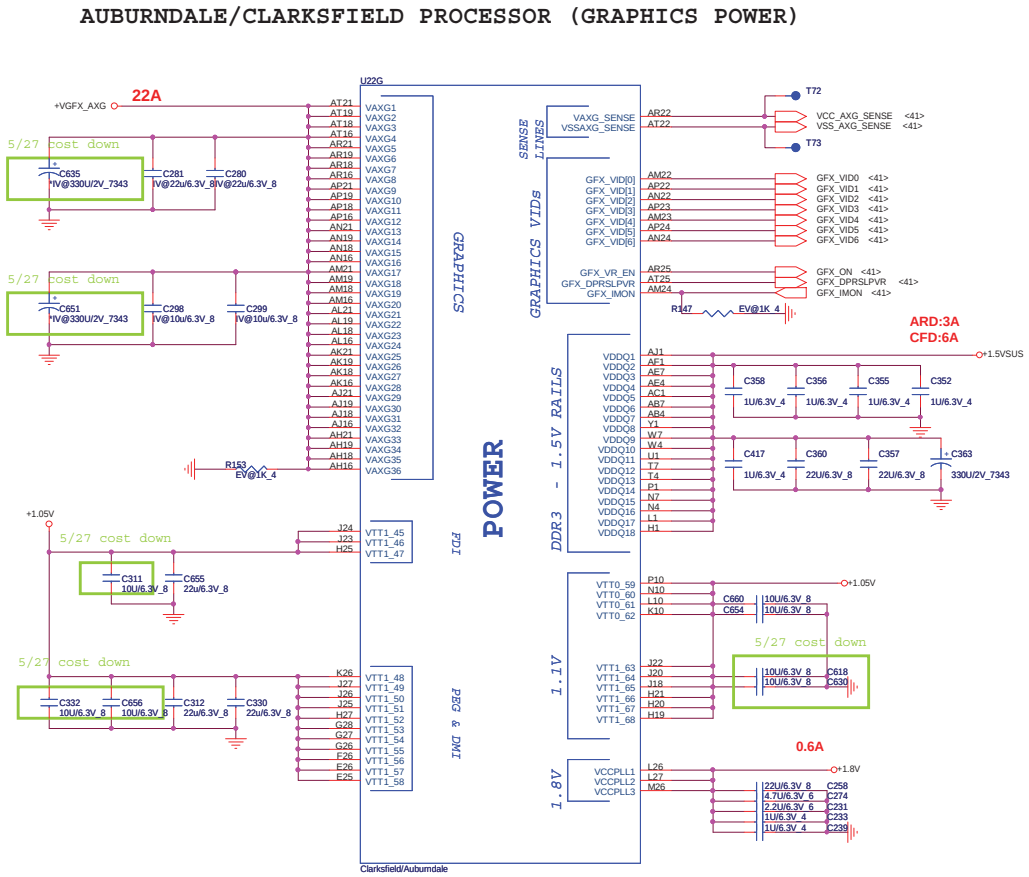

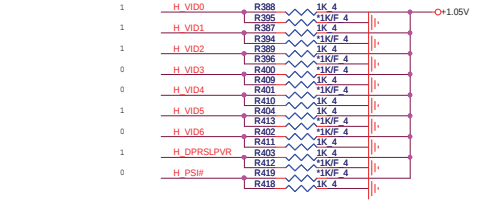

Note:
For Validating IMVP VR R6451 should be STUFF and R2N1 NO_STUFF

HFM_VID : Max 1.4V
LFM_VID : Min 0.65V

AUBURNDALE/CLARKSFIELD PROCESSOR (POWER)

Quanta Computer Inc.
PROJECT : ZQ9

Size	Document Number	Rev
	AUBURNDA 3/4 (PWR)	1A

Date: Tuesday, June 22, 2010 Sheet 6 of 45

AUBURNDALE/CLARKSFIELD PROCESSOR (GND)

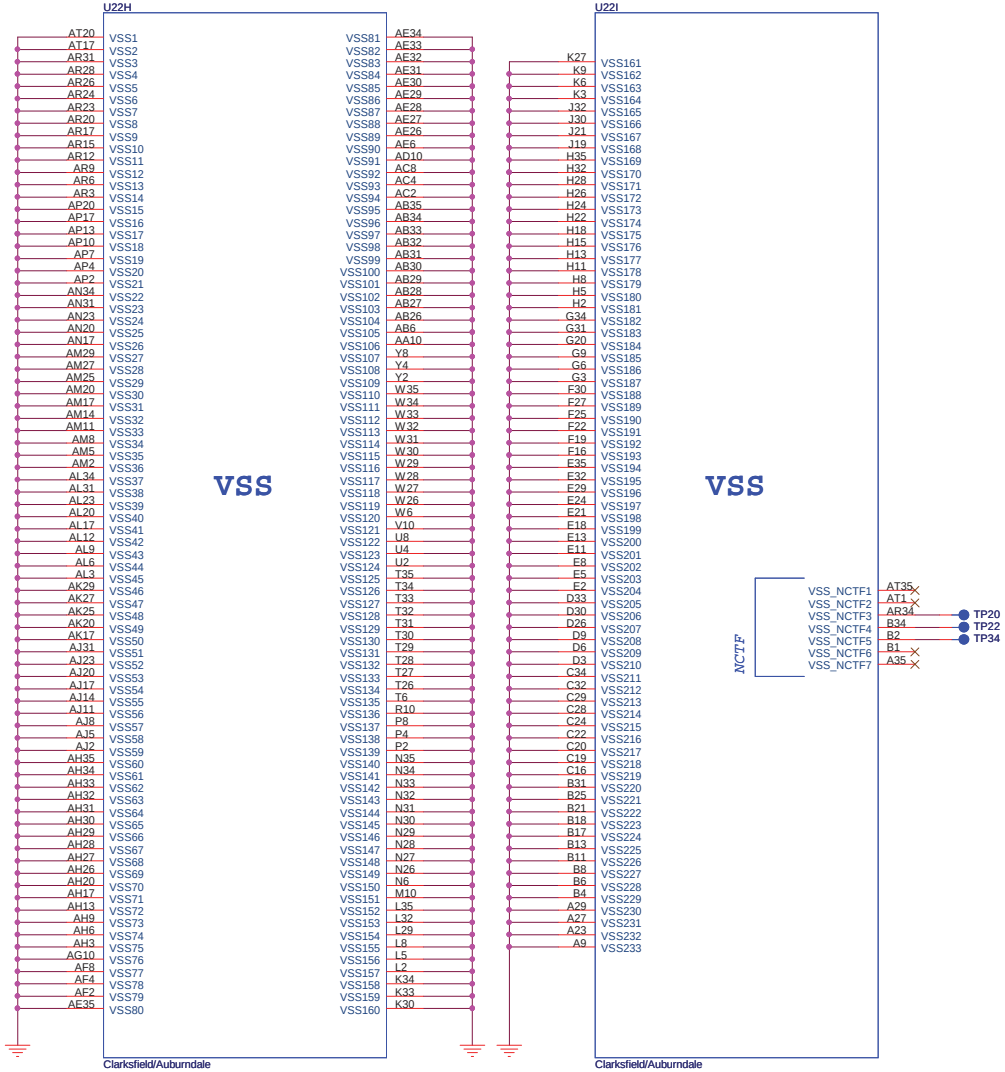

AUBURNDALE/CLARKSFIELD PROCESSOR(RESERVED, CFG)

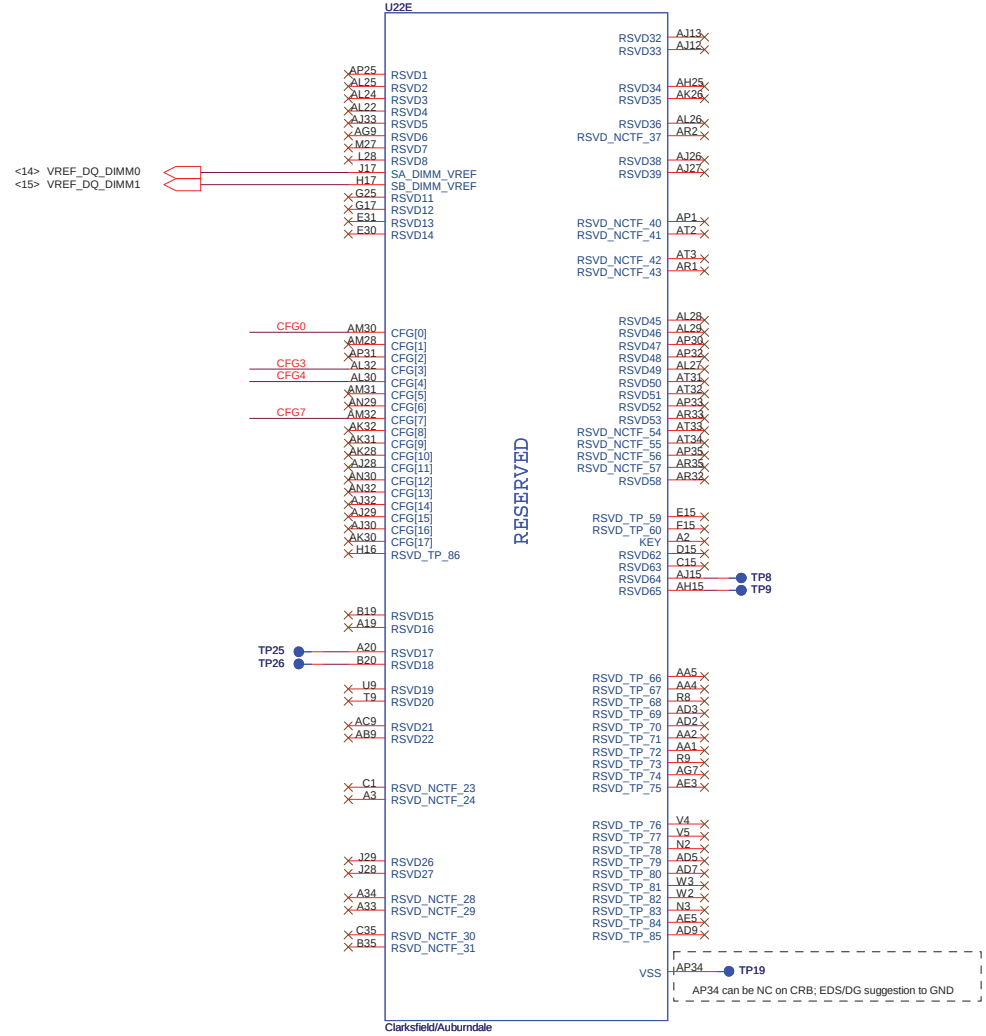

Processor Strapping

	1	0	DEFAULT	
CFG0 (PCI-Epress Configuration Select)	Single PEG	Bifurcation enabled	1	CFG0 R128 *3.01K_NC
CFG3 (PCI-Epress Static Lane Reversal)	Normal Operation	Lane Numbers Reversed	1	CFG3 R125 3.01K/F_4
CFG4 (Embended Display Port Presence)	Disabled; No Physical Display Port attached to Embedded Diplay Port	Enabled; An external Display port device is connected to the Embedded Display port	1	CFG4 R127 *3.01K
T h e e c d B1 B P R				CFG7 R126 *3.01K/F_4

Quanta Computer Inc.

PROJECT : ZR7B

Size	Document Number	Rev
	AUBURNDA 4/4	1A

Date: Tuesday, June 22, 2010 Sheet 7 of 45

IBEX PEAK-M (DMI,FDI,GPIO)

0-ohm resistor place close to PCH

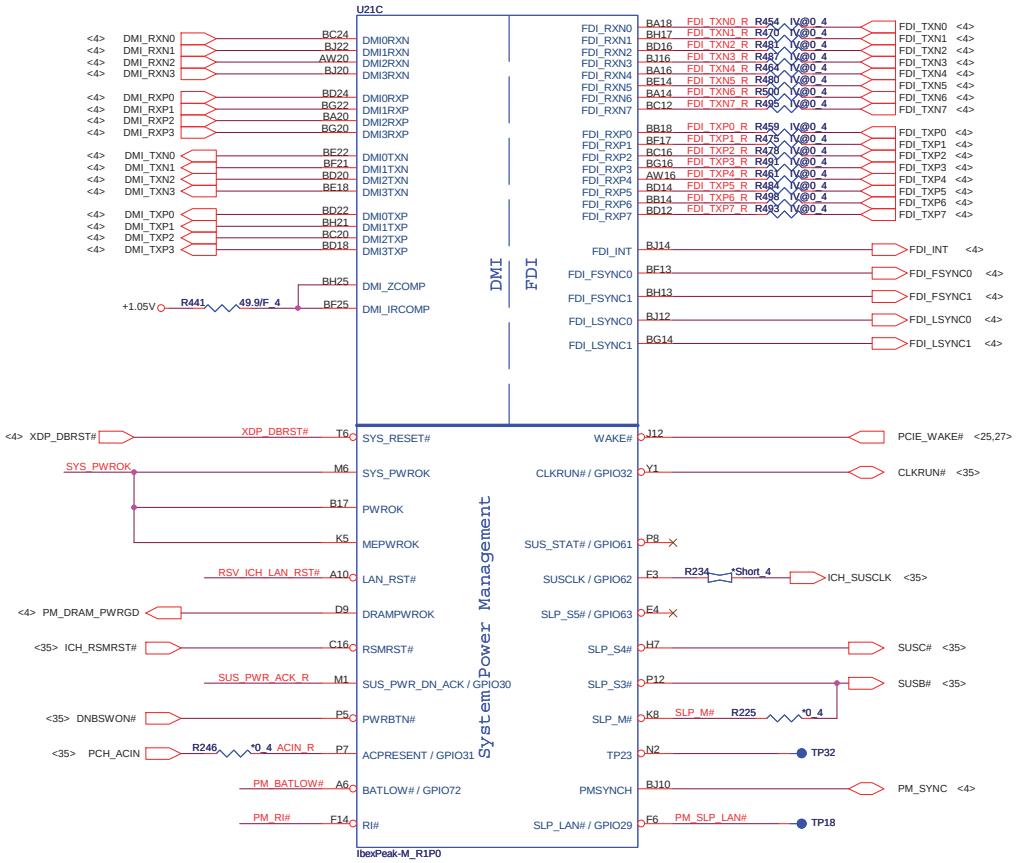

AC-coupling CAP place close to PCH

IBEX PEAK-M (LVDS,DDI)

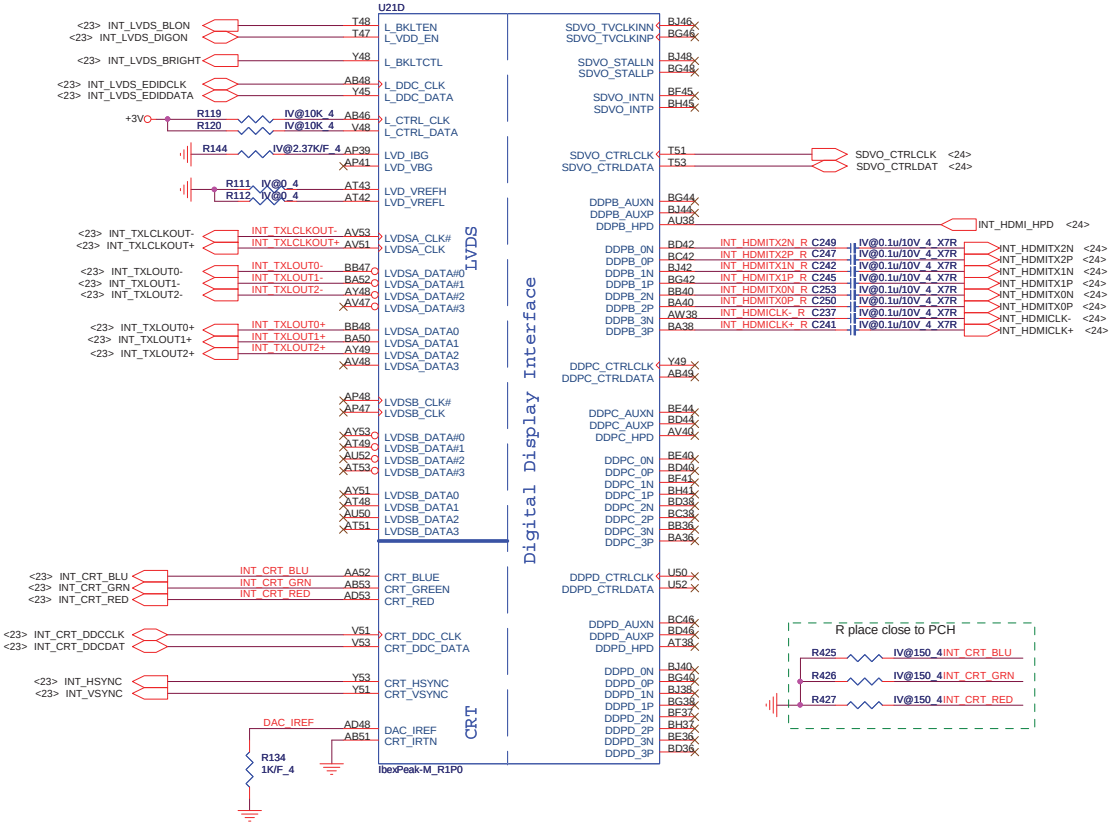

PCH Pull-high/low

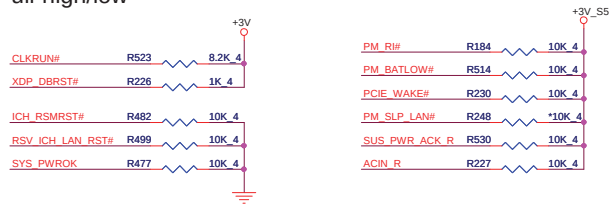

System PWR_OK

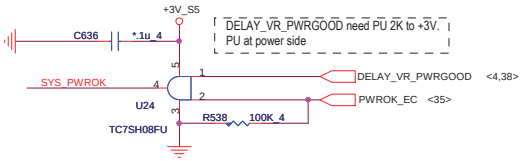

Quanta Computer Inc.

PROJECT : ZQ9

Size	Document Number	Rev
	IBEX PEAK-M 1/6	1A

Date: Tuesday, June 22, 2010 Sheet 8 of 45

RTC Circuitry

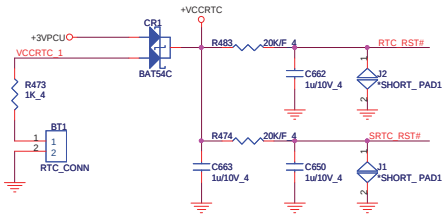

HDA Bus

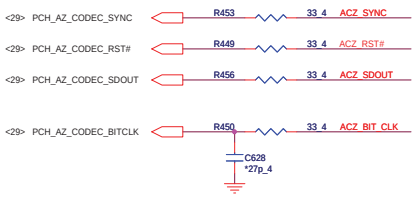

PCH SPI

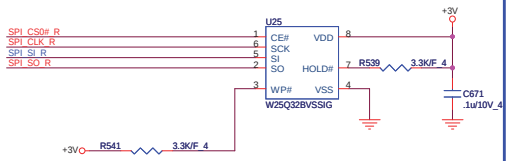

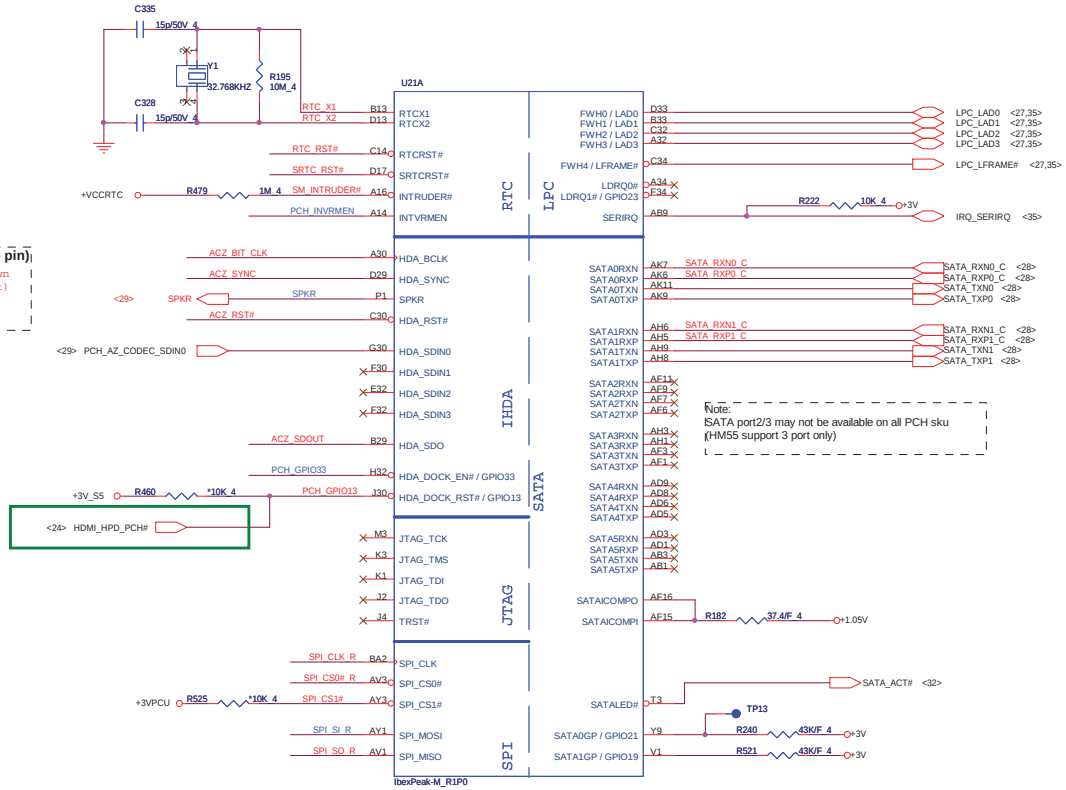

Note:
SATA port2/3 may not be available on all PCH sku
(HM55 support 3 port only)

PCH Strap Pin Configuration Table-1

INTVRMEN	Integrated 1.05V VRM Enable / Disable	1 = Integrated VRM is enabled 0 = Integrated VRM is disabled	+VCCRTC R489 330K_6 PCH_INVRMEN
SPI_MOSI	TPM Functionality Disable	1 = Enabled 0 = Disable	+3V R540 *1K_4 SPI_SI_R
SPKR	Reboot option at power-up	0 = Default Mode (Internal weak Pull-down) 1 = No Reboot Mode with TCO Disabled	+3V R532 *1K/F_4 SPKR
HDA_DOCK_EN #/GPIO33	Flash Descriptor Security Override	0 = Flash Descriptor Security will be overridden 1 = Security measure defined in the Flash Descriptor will be enabled.	PCH_GPIO33 R164 *1K/F_4 R145 *10K_4 +3V
GNT0#, GNT1#	Boot BIOS Strap	(0,0) = LPC (0,1) = Reserved NAND (1,0) = PCI (1,1) = SPI	R129 1K_4 R122 1K_4 R123 *1K_4 R131 *1K_4 +3V <10> PCI_GNT0# <10> PCI_GNT1#
GNT2#/ GPIO53	ESI Strap (Server Only)	ESI compatible mode is for server platforms only	<10> PWM_SELECT# R158 *1K/F_4
GNT3#/ GPIO55	Top-Block Swap Override	0 = Top Block Swap Mode 1 = Default Mode (Internal pull-up)	<10> PCI_GNT3# R421 *10K/F_4
NV_ALE	IntelR Anti-Theft Technology HDD Data Protection (Intel AT-d) Enable	1 = Enabled 0 = Disabled (Default)	<10> NV_ALE R202 *1K/F_4 +1.8V
NV_CLE	DMI Termination Voltage	DMI termination voltage. Weak internal pull-up. Do not pull low.	<10> NV_CLE R206 *1K/F_4 +1.8V

GPIO8	Reserved	This signal has a weak internal pull up. NOTE: This signal should not be pulled low	<11> RSV_GPIO8 R204 10K_4 +3V_S5 R203 *1K_4
GPIO15	Reserved	0 = Intel ME Crypto Transport Layer Security (TLS) cipher suite with no confidentiality 1 = Intel ME Crypto Transport Layer Security (TLS) cipher suite with confidentiality	<11> CR_WAKE# R244 1K_4 +3V_S5
GPIO27	On-Die PLL Voltage Regulator <internal weak pull-up>	0 = Disables the VccVRM. 1 = Enables the internal VccVRM to have a clean supply for analog rails.	<11> PCH_GPIO27 R221 *10K_4

Quanta Computer Inc.

PROJECT : ZQ9

Size	Document Number	Rev
	IBEX PEAK-M 2/6	1A

Date: Tuesday, June 22, 2010 Sheet 9 of 45

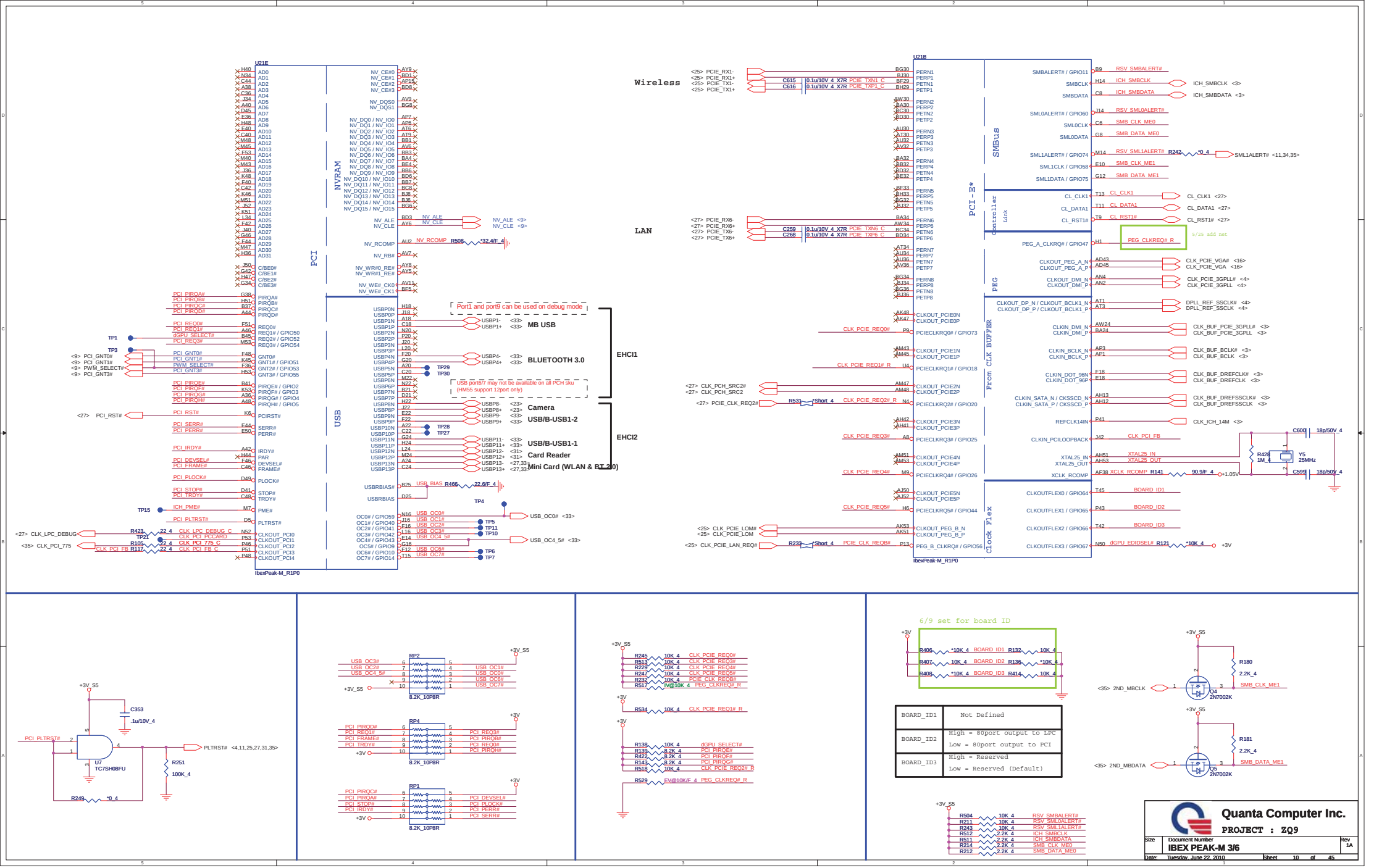

BOARD_ID1	Not Defined
BOARD_ID2	High = 80port output to LPC Low = 80port output to PCI
BOARD_ID3	High = Reserved Low = Reserved (Default)

IBEX PEAK-M (GPIO,VSS_NCTF,RSVD)

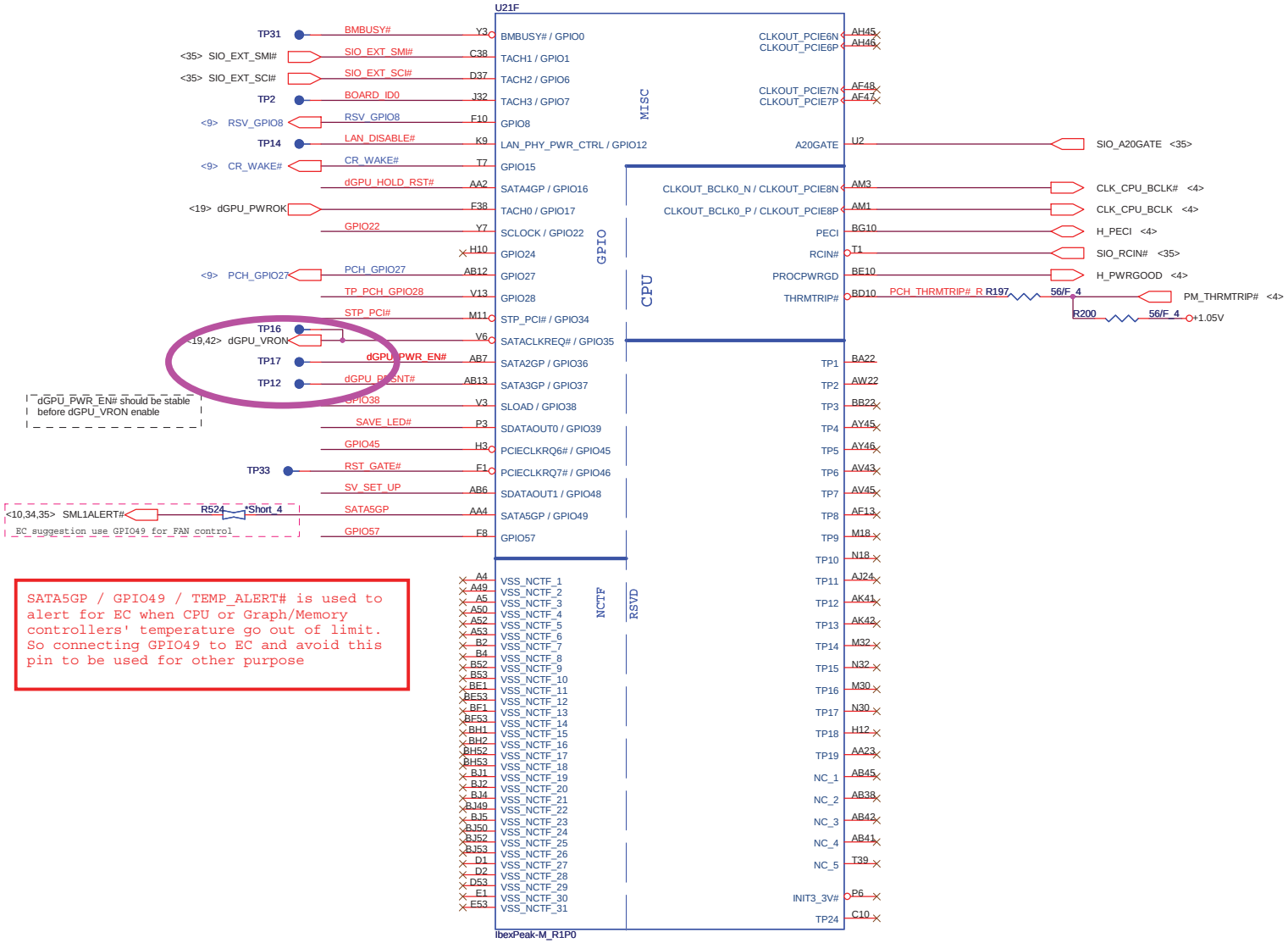

dGPU_PWR_EN# should be stable before dGPU_VRON enable

EC suggestion use GPIO49 for FAN control

SATA5GP / GPIO49 / TEMP_ALERT# is used to alert for EC when CPU or Graph/Memory controllers' temperature go out of limit. So connecting GPIO49 to EC and avoid this pin to be used for other purpose

GPU RST#

5/18 change for discrete only

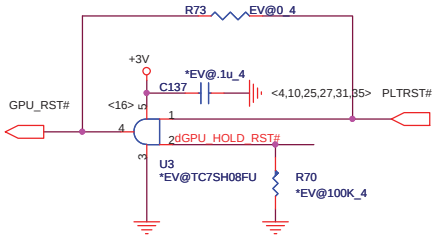

GPIO Pull-up/Pull-down

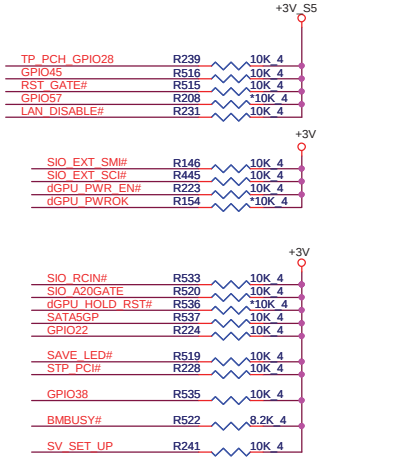

SV_SET_UP	1-X High = Strong (Default)

GPIO57 stuff PD and not stuff PU for Intel suggestion at 6/1

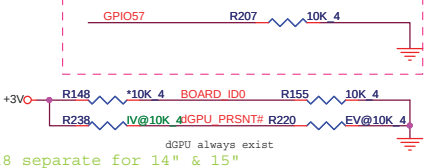

5/18 separate for 14" & 15"

BOARD_ID0	High = 15" Low = 14"
RSV_GPIO8	High = Disable Low = Enable

Quanta Computer Inc.

PROJECT : ZQ9

Size	Document Number	Rev
	IBEX PEAK-M 4/6	1A

Date: Tuesday, June 22, 2010 Sheet 11 of 45

IBEX PEAK-M (POWER)

3.3 V. This rail should be powered up during S0 system state.
Note that Thermal Sensor shares the same power supply rail with DAC.
The external filters on this pin are not needed in case internal graphic is disabled so only 3.3-V connection is required.

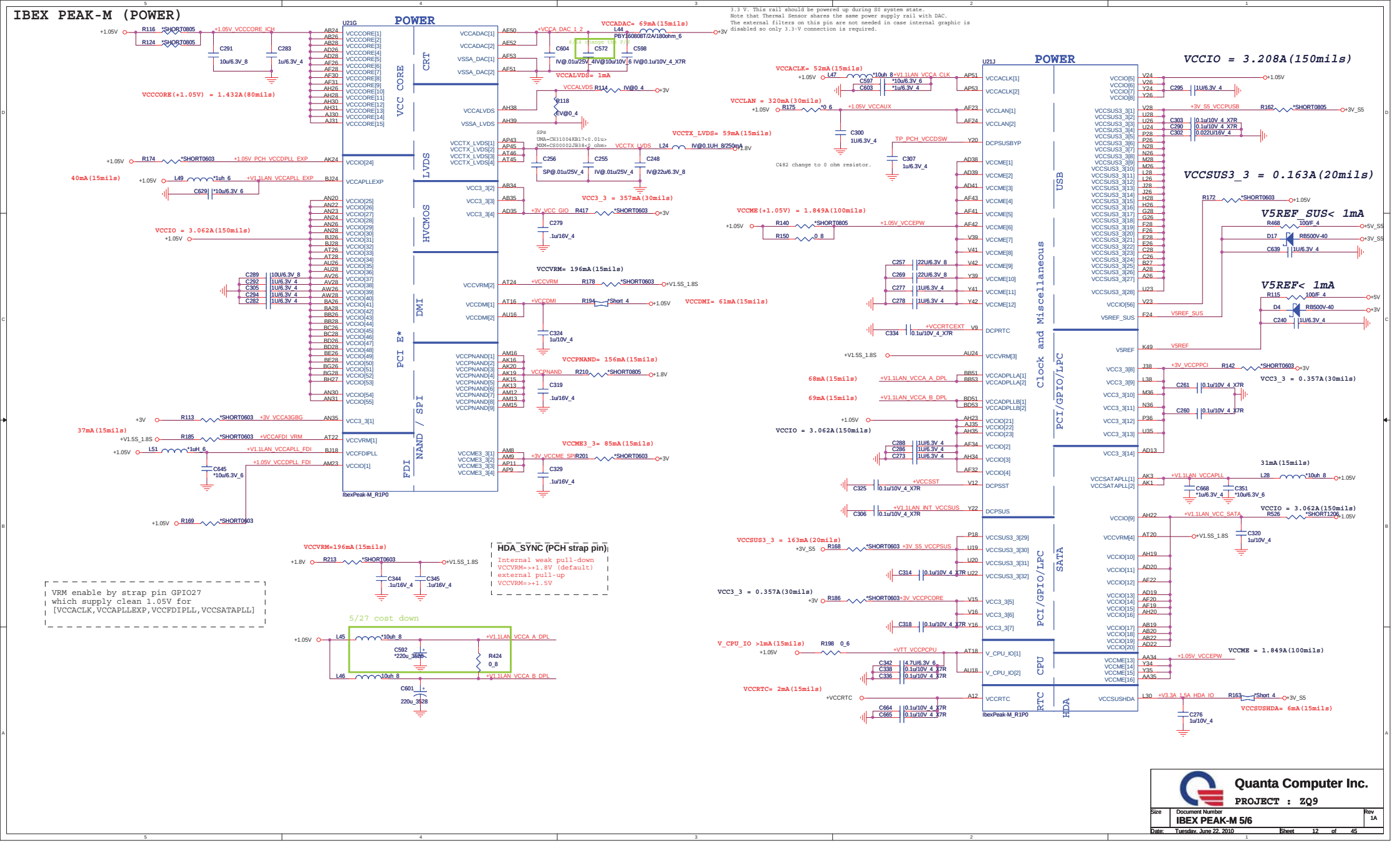

Quanta Computer Inc.

PROJECT : ZQ9

Size	Document Number	Rev
	IBEX PEAK-M 5/6	1A

Date: Tuesday, June 22, 2010 Sheet 12 of 45

IBEX PEAK-M (GND)

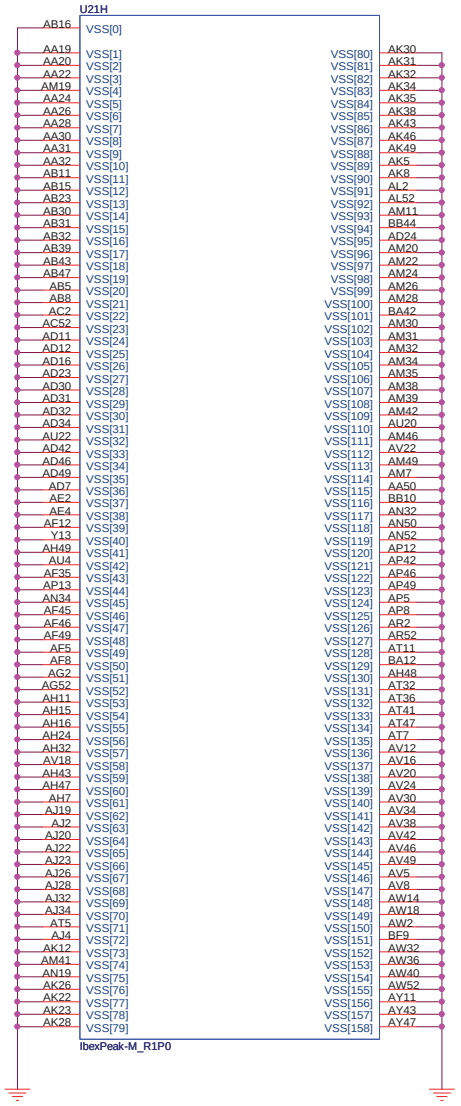

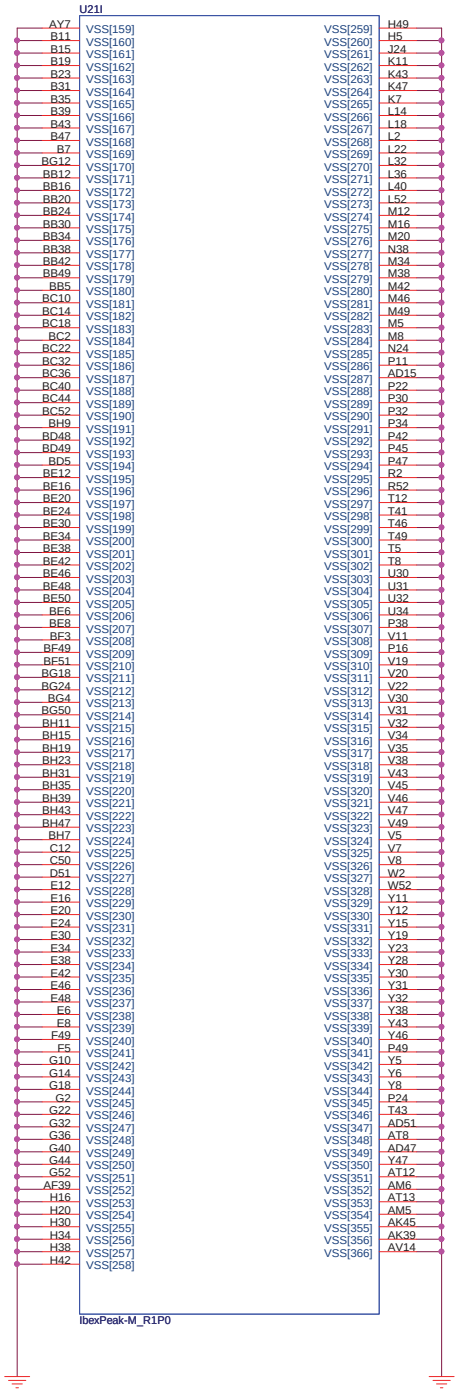

Quanta Computer Inc.

PROJECT : ZQ9

Size	Document Number	Rev
	IBEX PEAK-M 6/6	1A

Date: Tuesday, June 22, 2010 Sheet 13 of 45

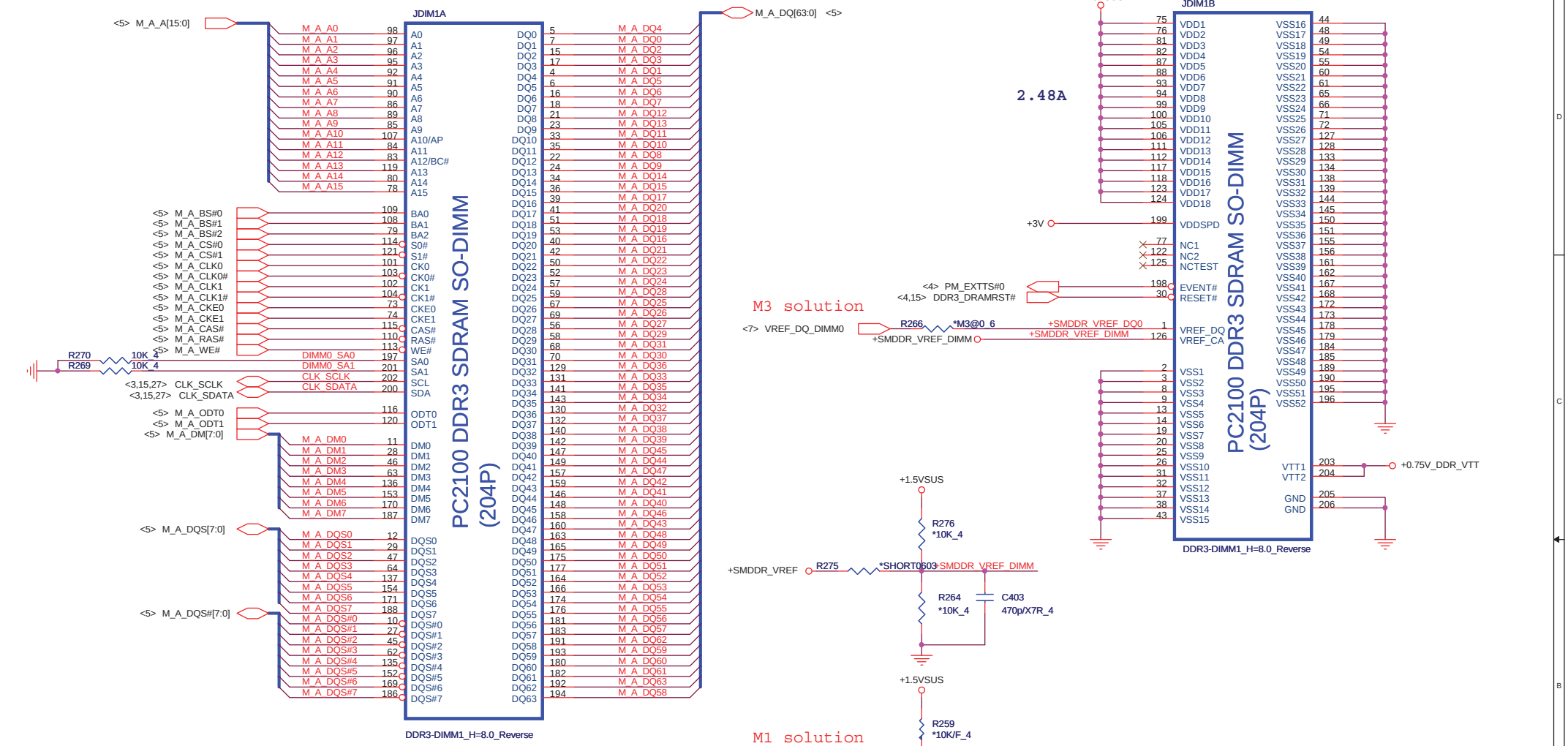

Place these Caps near So-Dimm0.

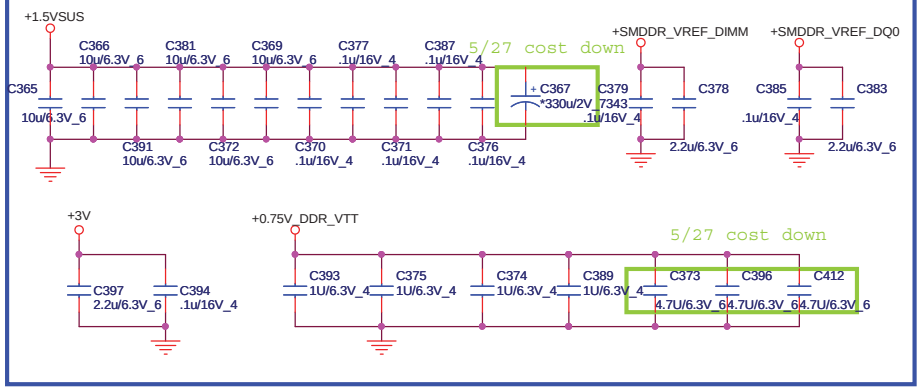

Quanta Computer Inc.

PROJECT : ZQ9

Size	Document Number	Rev
	DDRIII SO-DIMM-0	1A

Date: Tuesday, June 22, 2010 Sheet 14 of 45

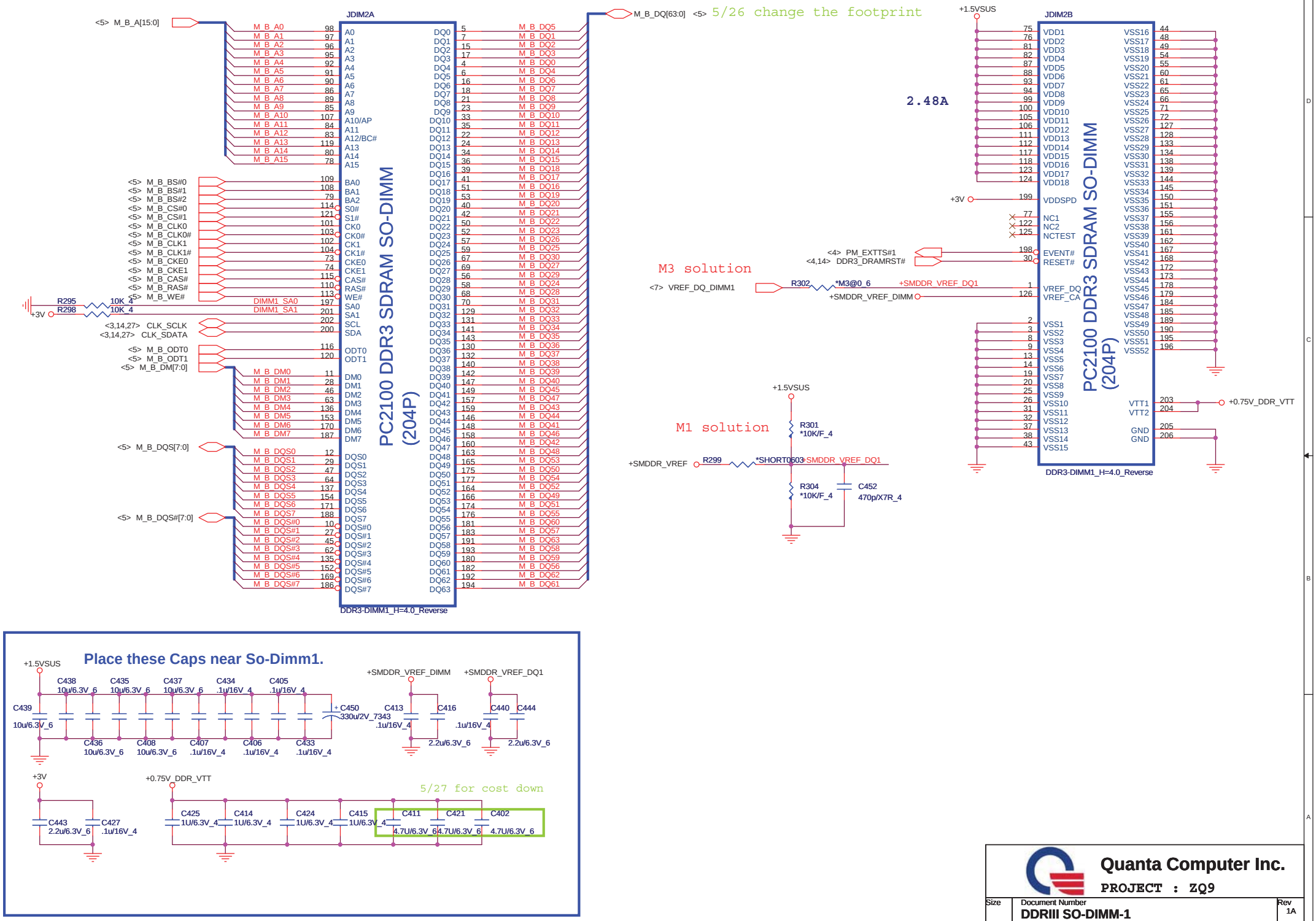

Quanta Computer Inc.

PROJECT : ZQ9

Size	Document Number	Rev
	DDRIII SO-DIMM-1	1A

Date: Tuesday, June 22, 2010 Sheet 15 of 45

GPU_1(VGA)

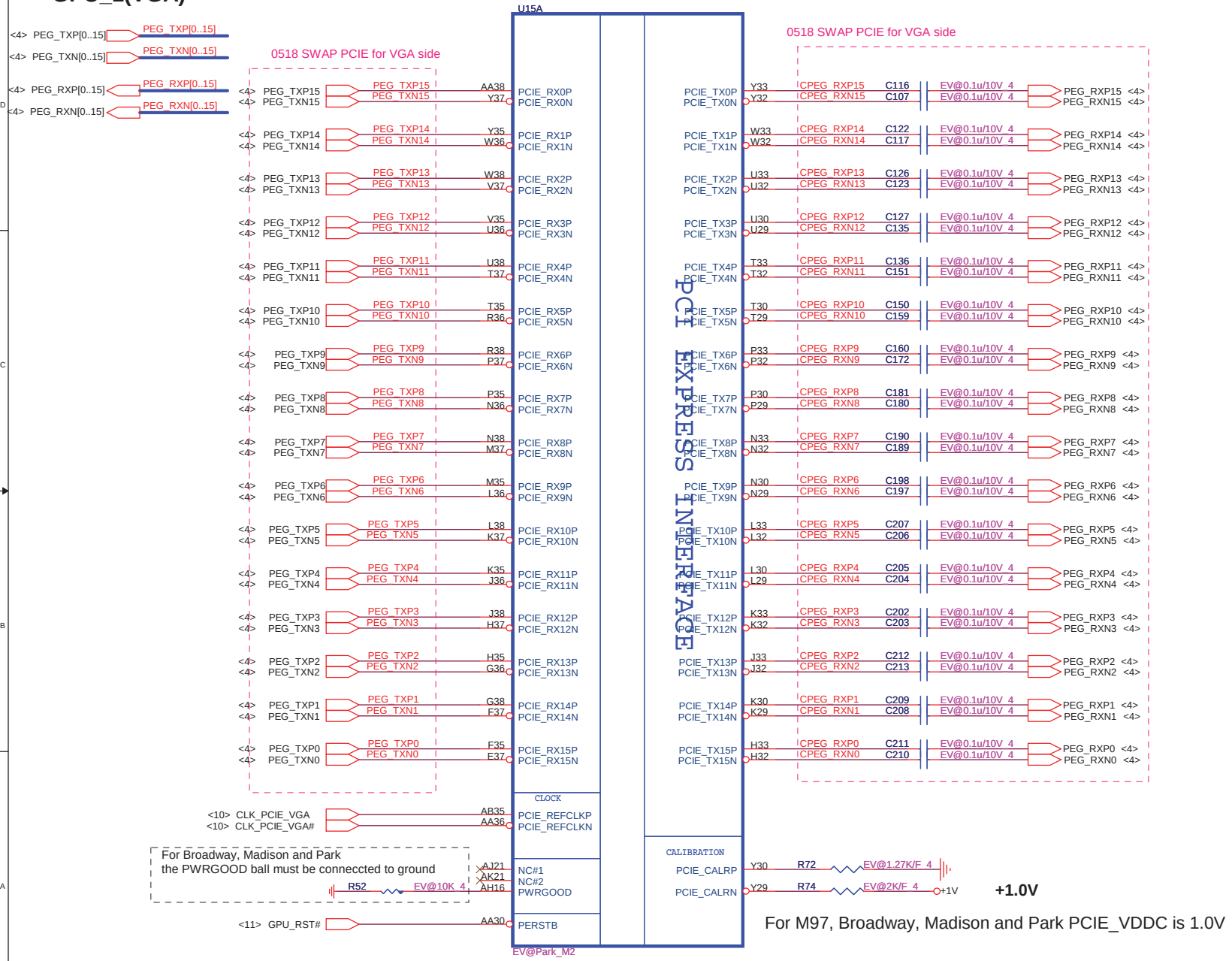

For M97, Broadway, Madison and Park PCIE_VDDC is 1.0V

Madison	AJ007720T02
Park	AJ077400T08

Quanta Computer Inc.

PROJECT : ZQ9

Size	Document Number	Rev
	Madison/Park M2-PCIE I/F	1A

Date: Tuesday, June 22, 2010 Sheet 16 of 45

GPU_2(VGA)

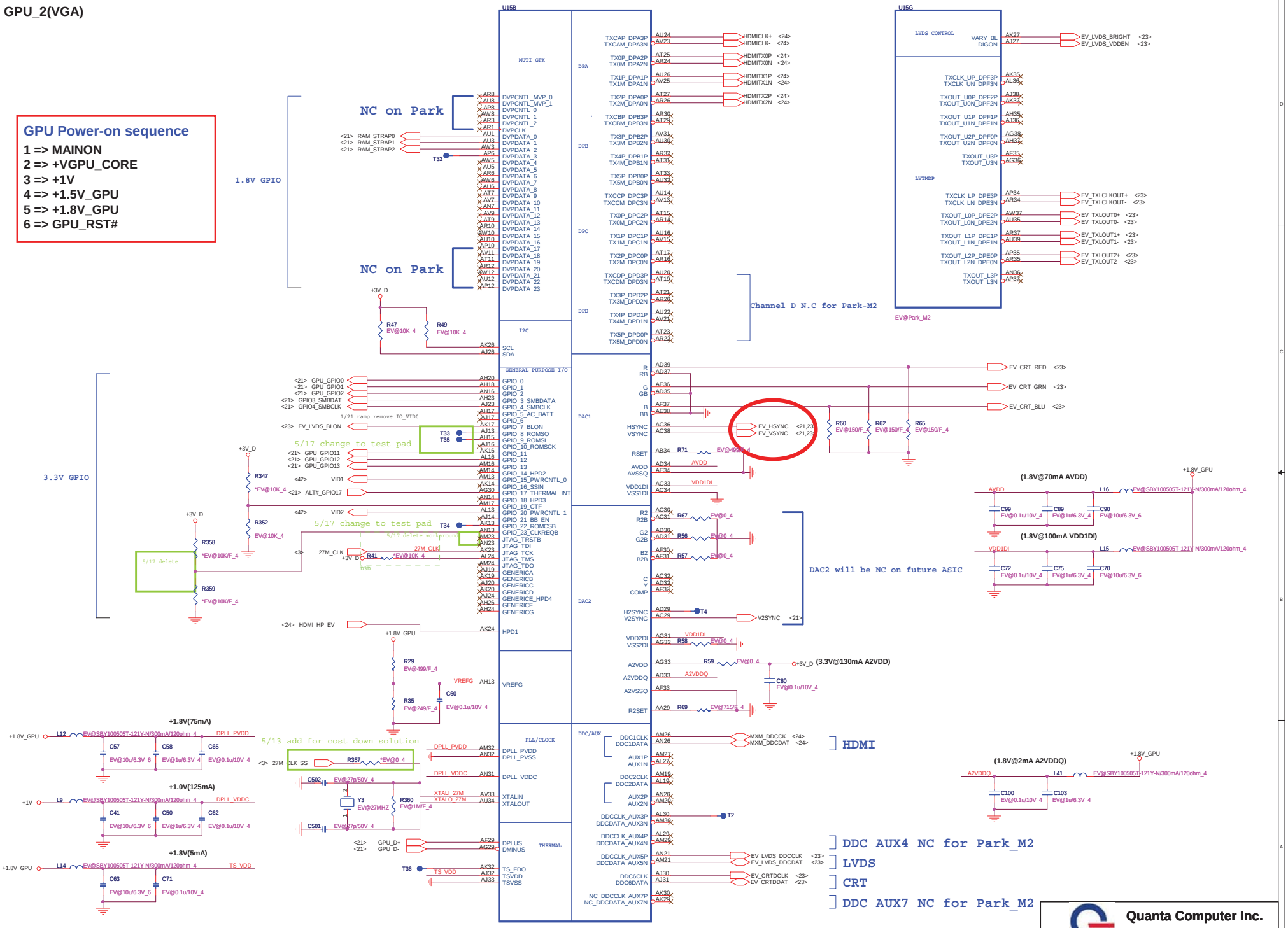
GPU Power-on sequence
1 => MAINON
2 => +VGPU_CORE
3 => +1V
4 => +1.5V_GPU
5 => +1.8V_GPU
6 => GPU_RST#
U15B
U15G
NC on Park
1.8V GPIO
3.3V GPIO
Channel D N.C for Park-M2
EV@Park_M2
5/17 change to test pad
5/17 delete
5/17 delete workaround
5/13 add for cost down solution
DAC2 will be NC on future ASIC
(1.8V@70mA AVDD)
(1.8V@100mA VDD1DI)
(1.8V@2mA A2VDDQ)
(3.3V@130mA A2VDD)
+1.8V(75mA)
+1.0V(125mA)
+1.8V(5mA)
HDMI
DDC AUX4 NC for Park_M2
LVDS
CRT
DDC AUX7 NC for Park_M2
Quanta Computer Inc.
PROJECT : ZQ9
Madison/Park M2-HOST I/F
Rev 1A
Date: Tuesday, June 22, 2010
Sheet 17 of 45

GPU_3(VGA)

Park M2-channel B used(S3 package use Channel A)

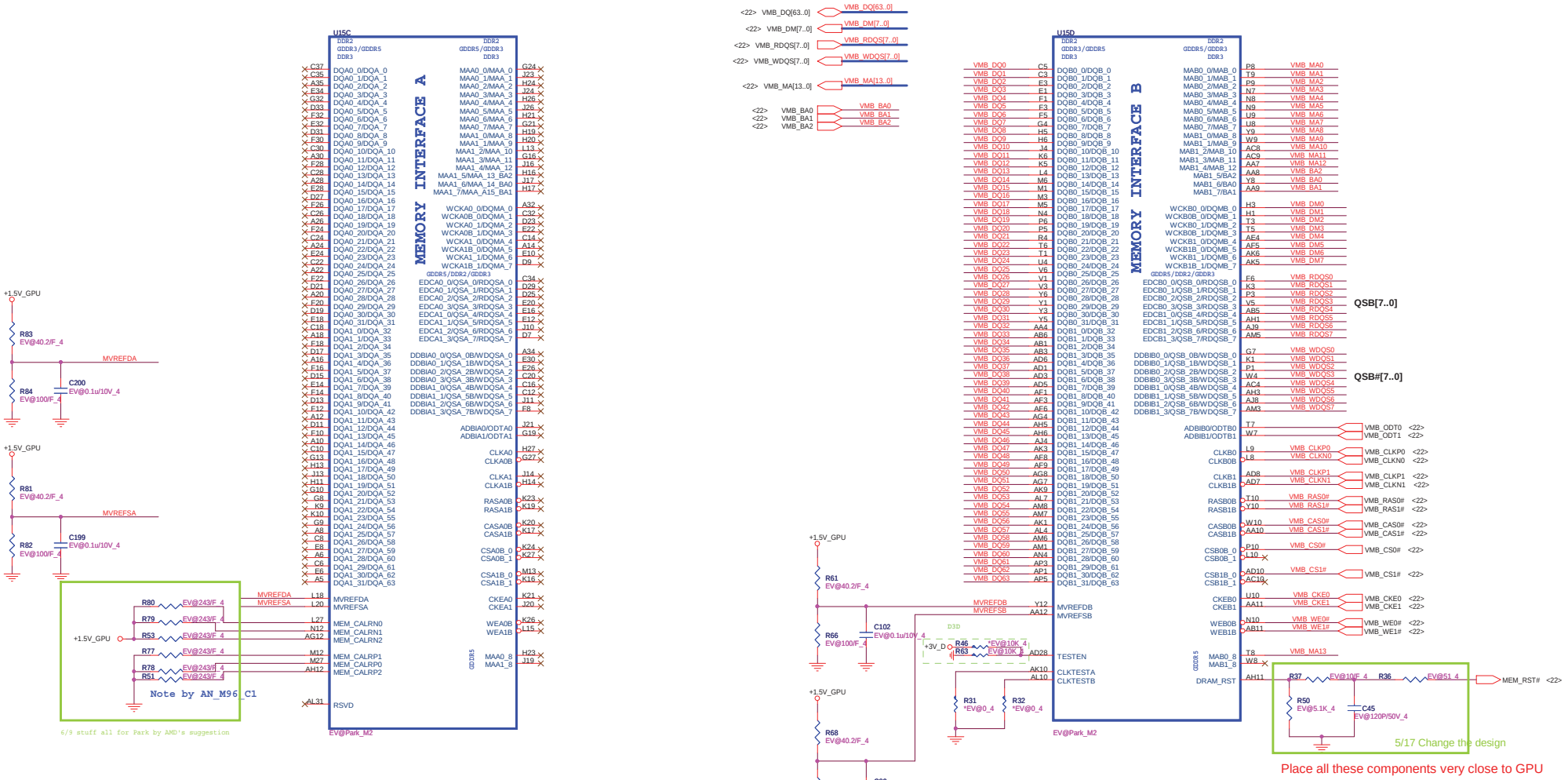

Quanta Computer Inc.		
PROJECT : ZQ9		
Size	Document Number: Madison/Park M2-MEM I/F	Rev 1A
Date: Tuesday, June 22, 2010	Sheet 18 of 45	

GPU_4(VGA)

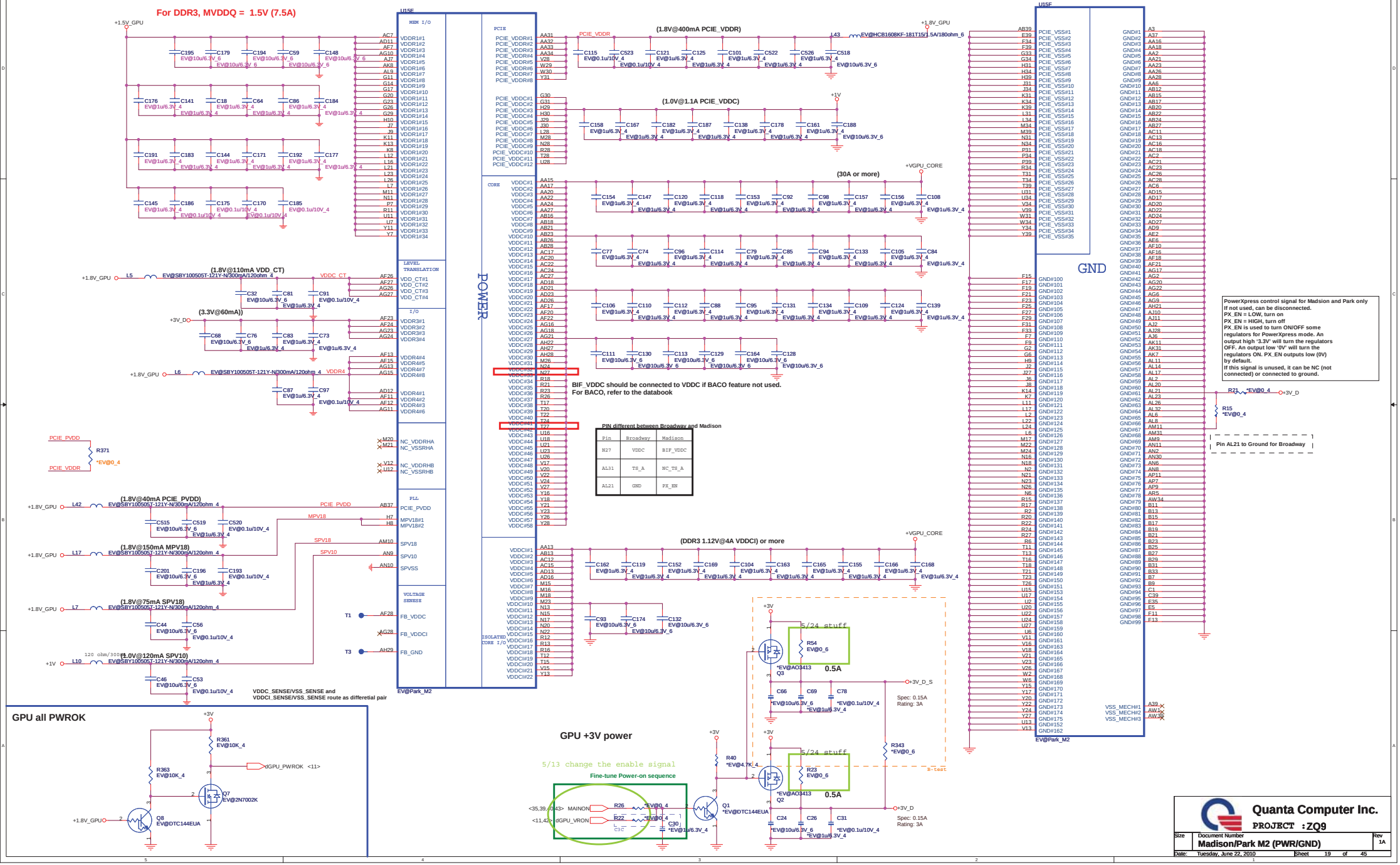

Quanta Computer Inc.	
PROJECT : ZQ9	
Size	Document Number: Madison/Park M2 (PWR/GND)
Rev	1A
Date: Tuesday, June 22, 2010	Sheet 19 of 45

GPU_5(VGA)

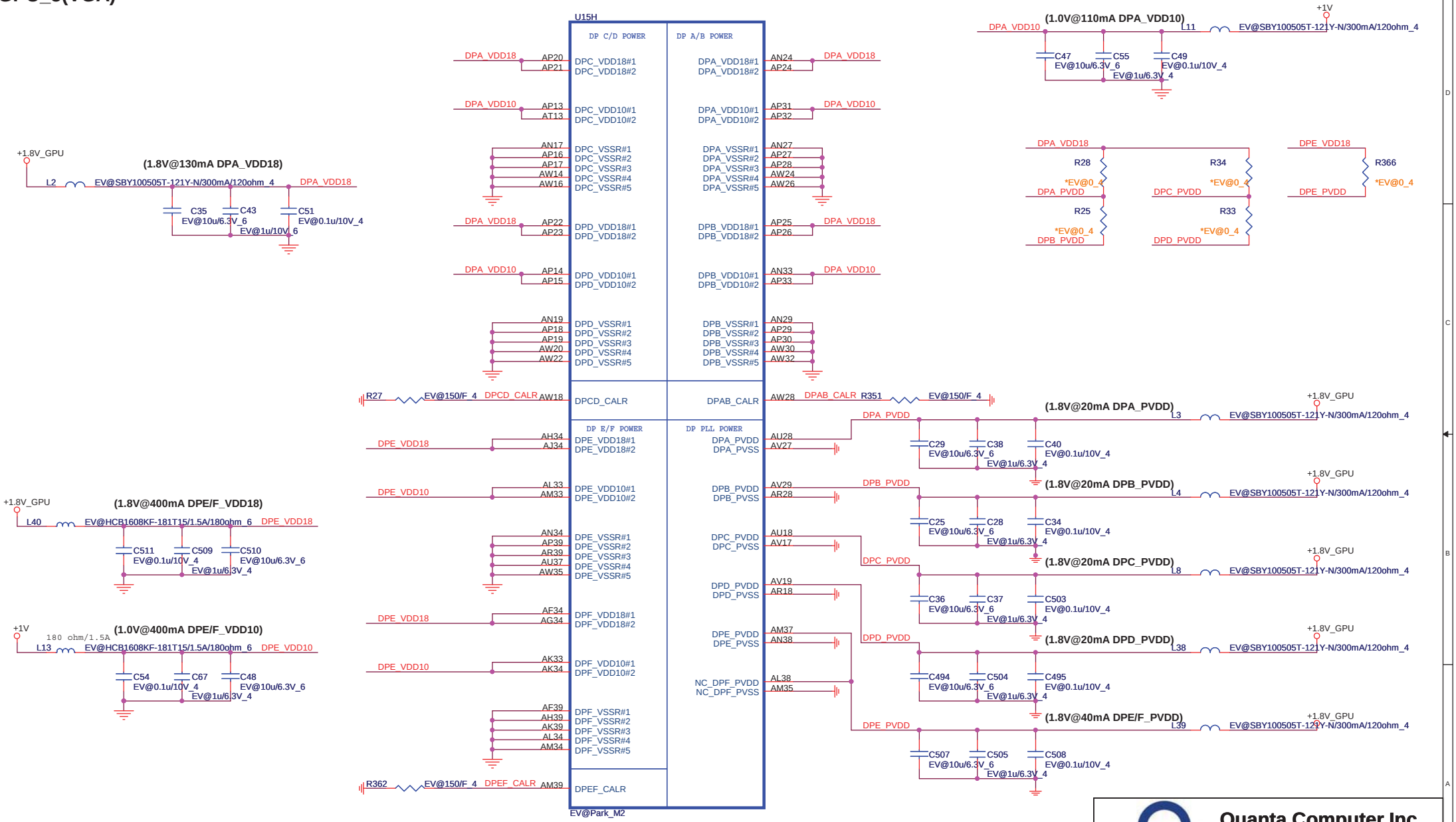

Quanta Computer Inc.

PROJECT : ZQ9

Size	Document Number	Rev
	<Doc>	1A

Date: Tuesday, June 22, 2010 Sheet 20 of 45

PIN STRAPS(VGA)

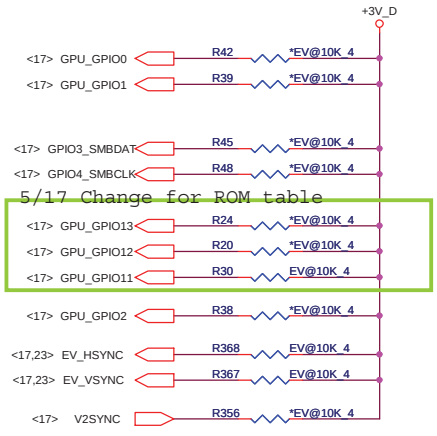

Size of the primary memory apertures	GPIO[13:11]
128 MB	000
256MB	001
64 MB	010
32 MB	011
More than 512 MB	Not Supported

CONFIGURATION STRAPS

ALLOW FOR PULLUP PADS FOR THESE STRAPS AND IF THESE GPIOS ARE USED, THEY MUST NOT CONFLICT DURING RESET

STRAPS	PIN	DESCRIPTION OF DEFAULT SETTINGS	DEFAULT	REMARK
TX_PWRS_ENB	GPIO0	0 = 50% TX OUTPUT SWING 1 = FULL TX OUTPUT SWING	0	
TX_DEEMPH_EN	GPIO1	PCIE TRANSMITTER DE-EMPHASIS ENABLED 0 = TX DE-EMPHASIS DISABLED 1 = TX DE-EMPHASIS ENABLED	0	
BIOS_ROM_EN	GPIO_22_ROMCSB	Enable external BIOS ROM device 0 - Disable external BIOS ROM device 1 - Enable external BIOS ROM device	0	
ROMIDCFG[2:0]	GPIO[13:11]	SERIAL ROM TYPE OR MEMORY APERTURE SIZE SELECT	001	See ROM table
BIF_GEN2_EN_A	GPIO2	0 = PCIE DEVICE AS 2.5GT/S CAPABLE 1 = PCIE DEVICE AS 5GT/S CAPABLE	0	
GPIO_8_ROMSO H2SYNC GPIO_21_BB_EN	GPIO8 H2SYNC GPIO21	Reserved Only	0	
AUD[1] AUD[0]	HSYNC VSYNC	AUD[1:0] 00: NO AUDIO FUNCTION. 01: AUDIO FOR DISPLAYPORT AND HDMI IF ADAPTER IS DETECTED. 10: AUDIO FOR DISPLAYPORT ONLY. 11: AUDIO FOR BOTH DISPLAYPORT AND HDMI.	11	See Audio table
GPIO_9_ROMSI	GPIO9	0 = VGA controller capacity enable	0	
VIP_DEVICE_STRAP_ENA	V2SYNC	0 = DRIVER would ignore the value sample on VHAD_0 during RESET.	0	

EEPROM(VGA) 5/17 delete EEPROM

Thermal Sensor(VGA)

Vendor	P/N
WINDBOND	AL83L771K01
GMT	AL000780000

USD0.16

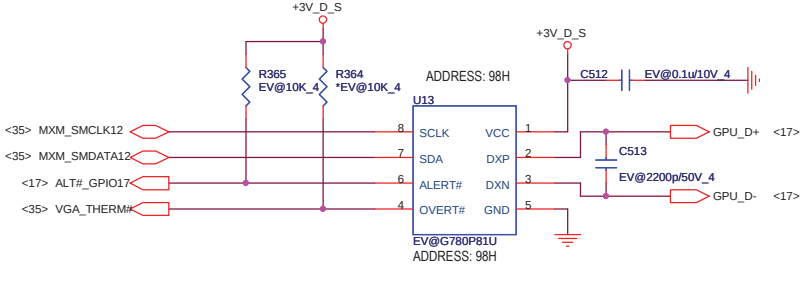

DDR3 Memory Aperture size(GPU)

DDR3 Memory size

Vendor	Vendor P/N	STN B/S P/N	RAM_STRAP2 DVPDATA_2	RAM_STRAP1 DVPDATA_1	RAM_STRAP0 DVPDATA_0
Hynix			1	1	0
	H5TQ1G63BFR-12C	AKD5LZGTW04 (64M*16)	1	0	0
	H5TQ2G63BFR-12C	AKD5MGGTW03 (128M*16)	1	0	1
Samsung					
	K4W1G1646E-HC12	AKD5LGGT506 (64M*16)	0	0	0
	K4W2G1646B-HC12	AKD5MGGT500 (128m*16)	0	0	1
AMD	23EY2387MA12-SZ	AKD5LGGT700	0	1	0

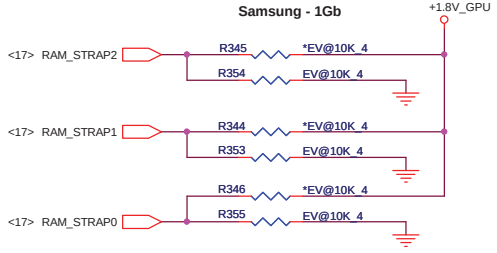

RAM_STRAP2 SET DDR3 Vendor
RAM_STRAP[1:0] SET SIZE.

Quanta Computer Inc.

PROJECT : ZQ9

Size	Document Number	Rev
	Strip/Thermal	1A

Date: Tuesday, June 22, 2010 Sheet 21 of 45

CHANNEL B: 512MB DDR3 (16*64M*4pcs)

Park, M92M Use Channel B Memory Interface Only

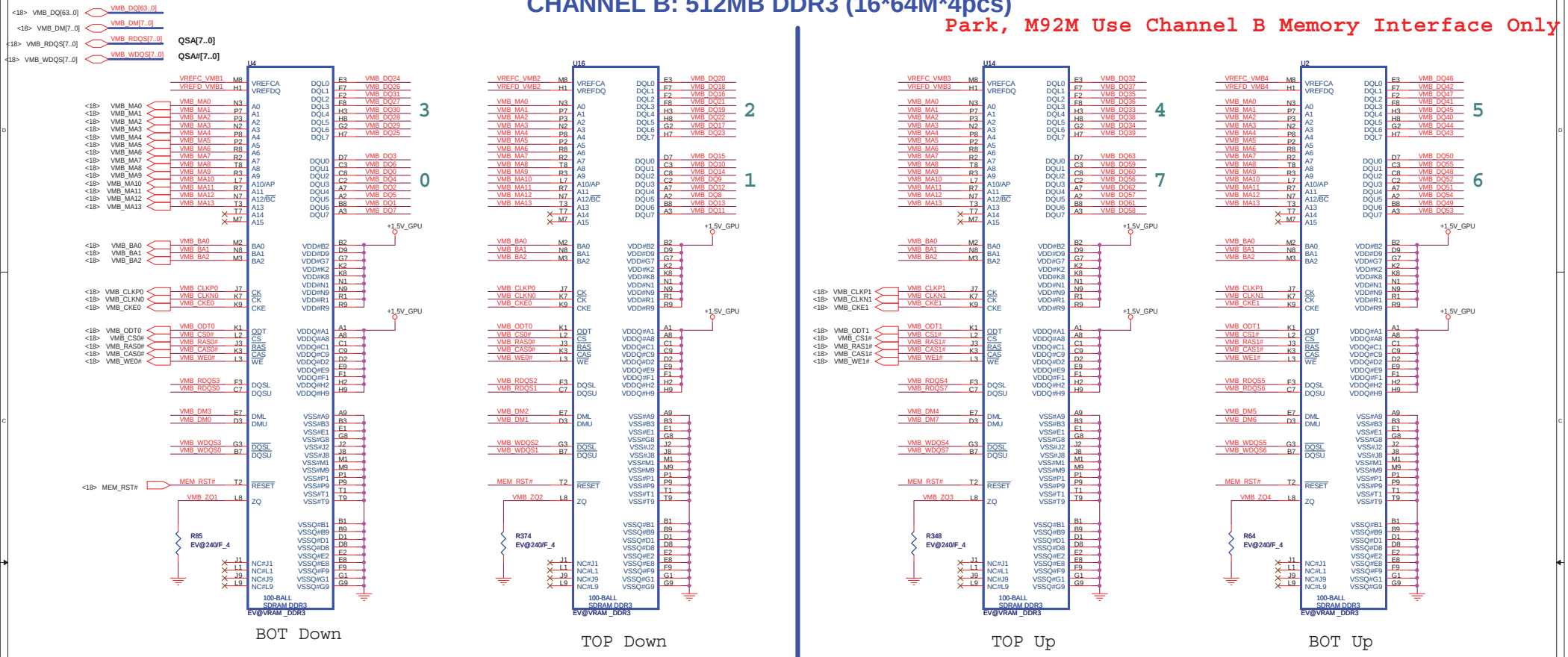

Group-B0 VREF

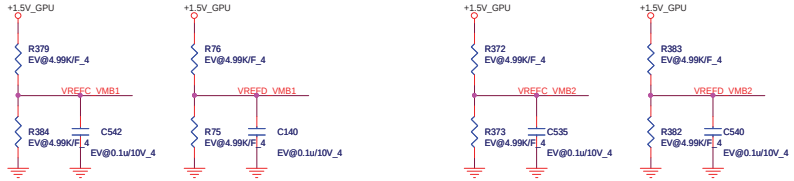

Group-B1 VREF

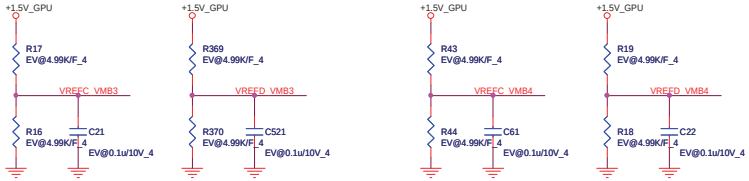

MEM_B0 CLK

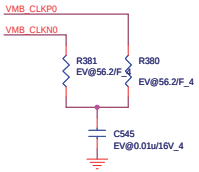

Group-B0 decoupling CAP

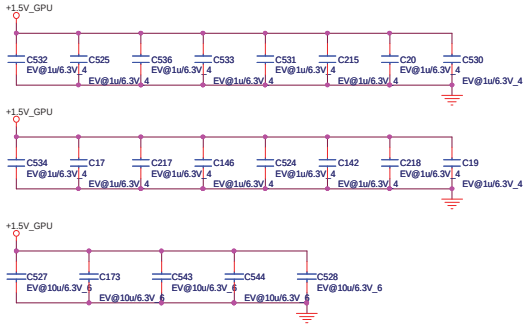

Group-B1 decoupling CAP

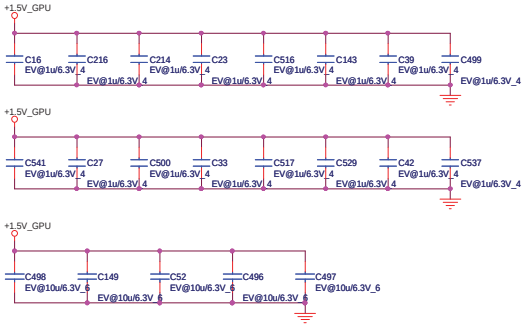

MEM_B1 CLK

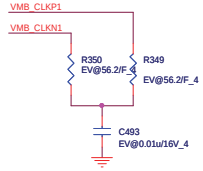

Quanta Computer Inc.

PROJECT : ZQ9

Size	Document Number	Rev
	MEMORY 2 channel B	1A

Date: Tuesday, June 22, 2010 Sheet 22 of 45

CRT Switch

IV@ 0_ohm Resistor place close to Joint-Point
EV@

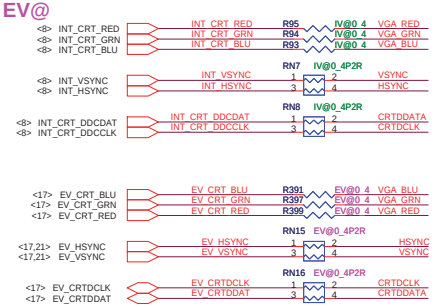

CRT

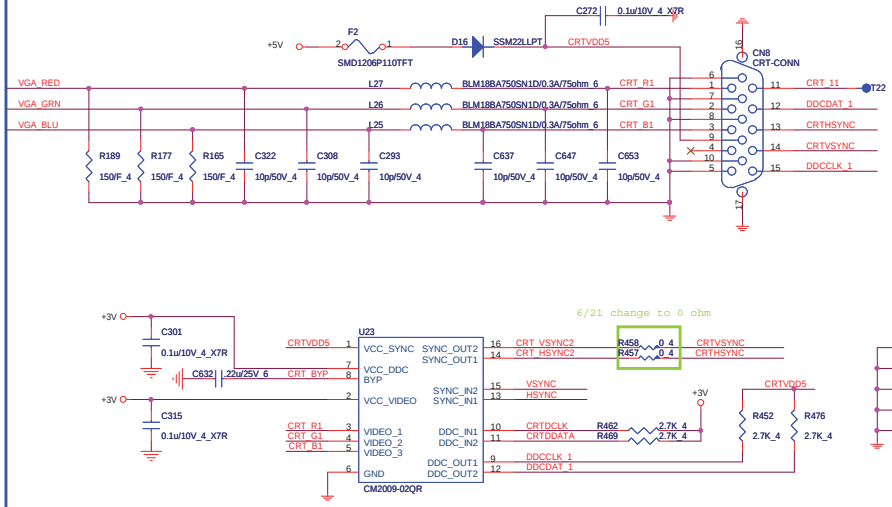

LVDS

0_ohm Resistor place close to Joint-Point

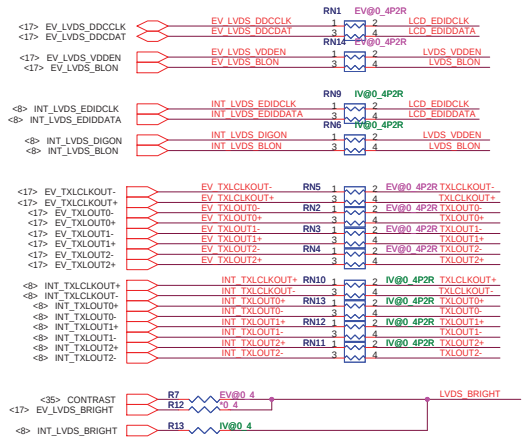

LVDS

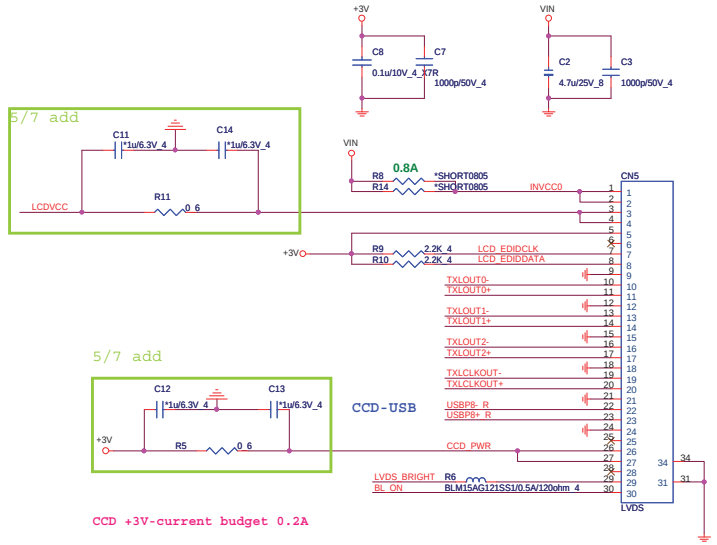

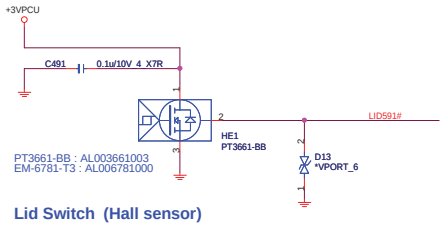

Lid Switch (Hall sensor)

LCD Power

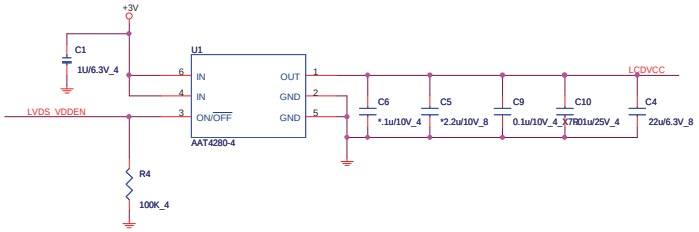

Backlight Control

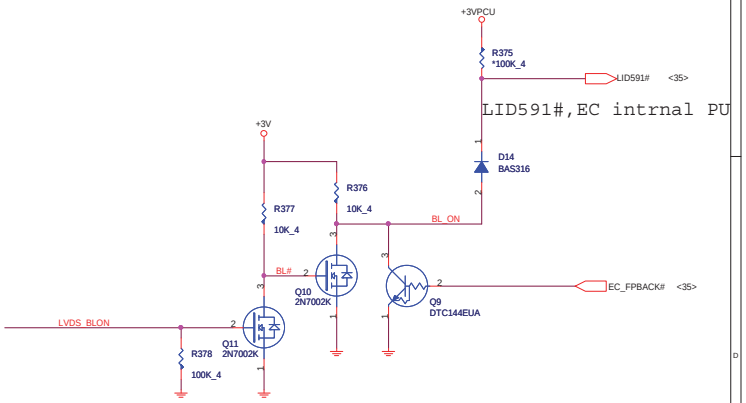

Quanta Computer Inc.

PROJECT : ZQ9

Size	Document Number	Rev
	CRT/LVDS/CAMERA/LID	1A

Date: Tuesday, June 22, 2010 Sheet 23 of 45

I@ HDMI LEVEL SHIFTER

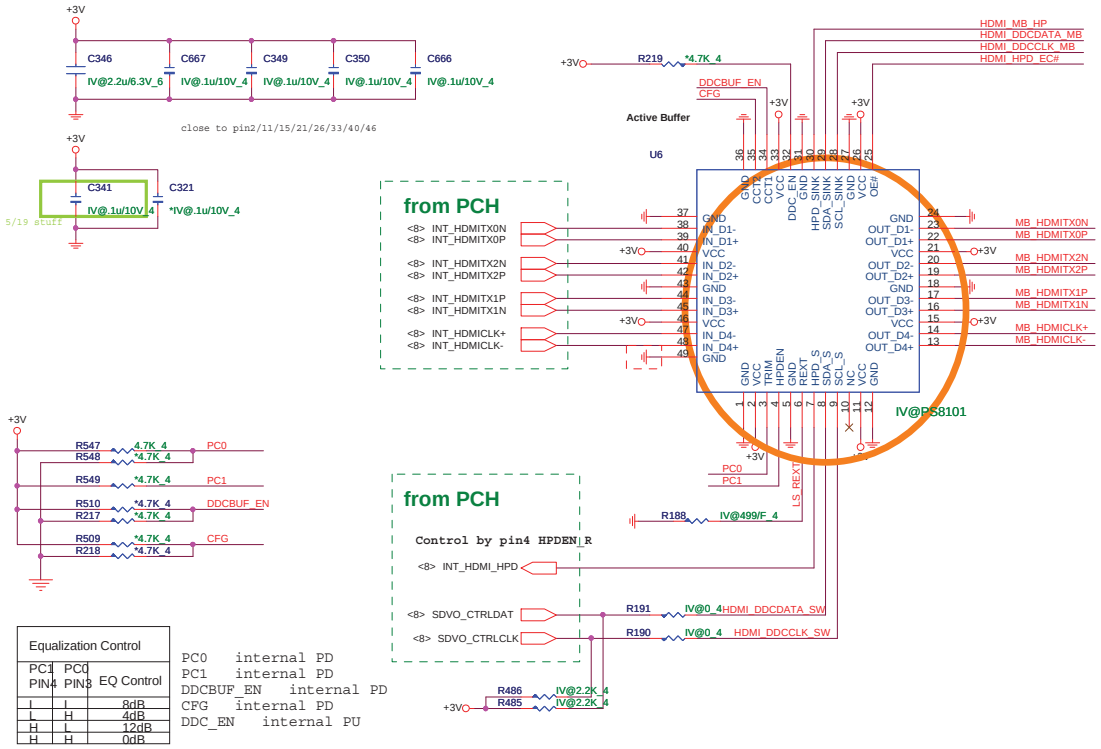

Equalization Control		
PC1 PIN4	PC0 PIN3	EQ Control
L	L	8dB
L	H	4dB
H	L	12dB
H	H	0dB

PC0 internal PD
PC1 internal PD
DDCBUF_EN internal PD
CFG internal PD
DDC_EN internal PU

SW@HDMI-detect

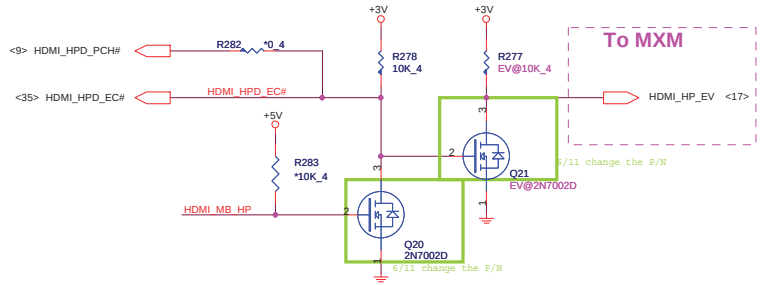

I2C

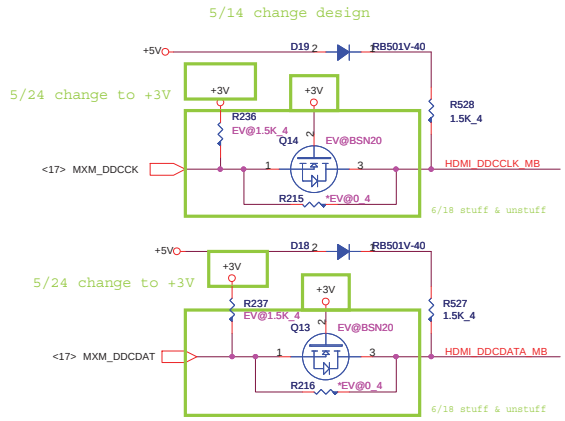

Switchable Graphic HDMI source

AC-coupling CAP place close to HDMI-connector

From GPU

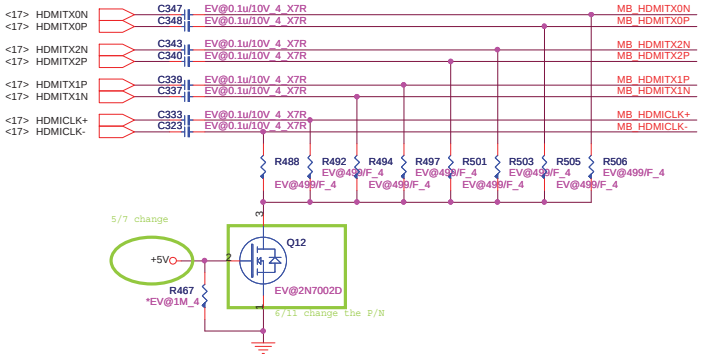

EMI

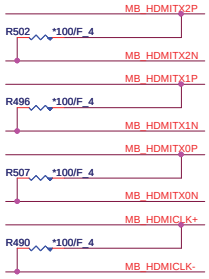

HDMI connector

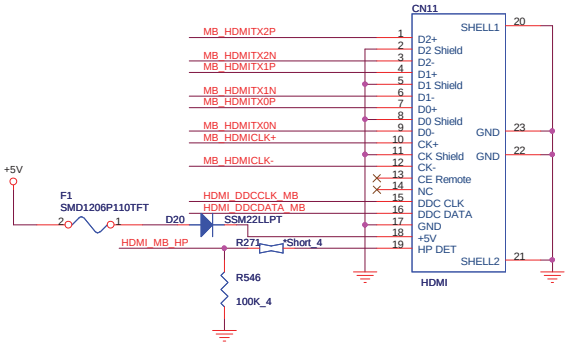

Quanta Computer Inc.		
PROJECT : ZQ9		
Size	Document Number: HDMI (PS8101)	Rev 1A
Date: Tuesday, June 22, 2010	Sheet 24 of 45	

Giga-LAN BCM57780

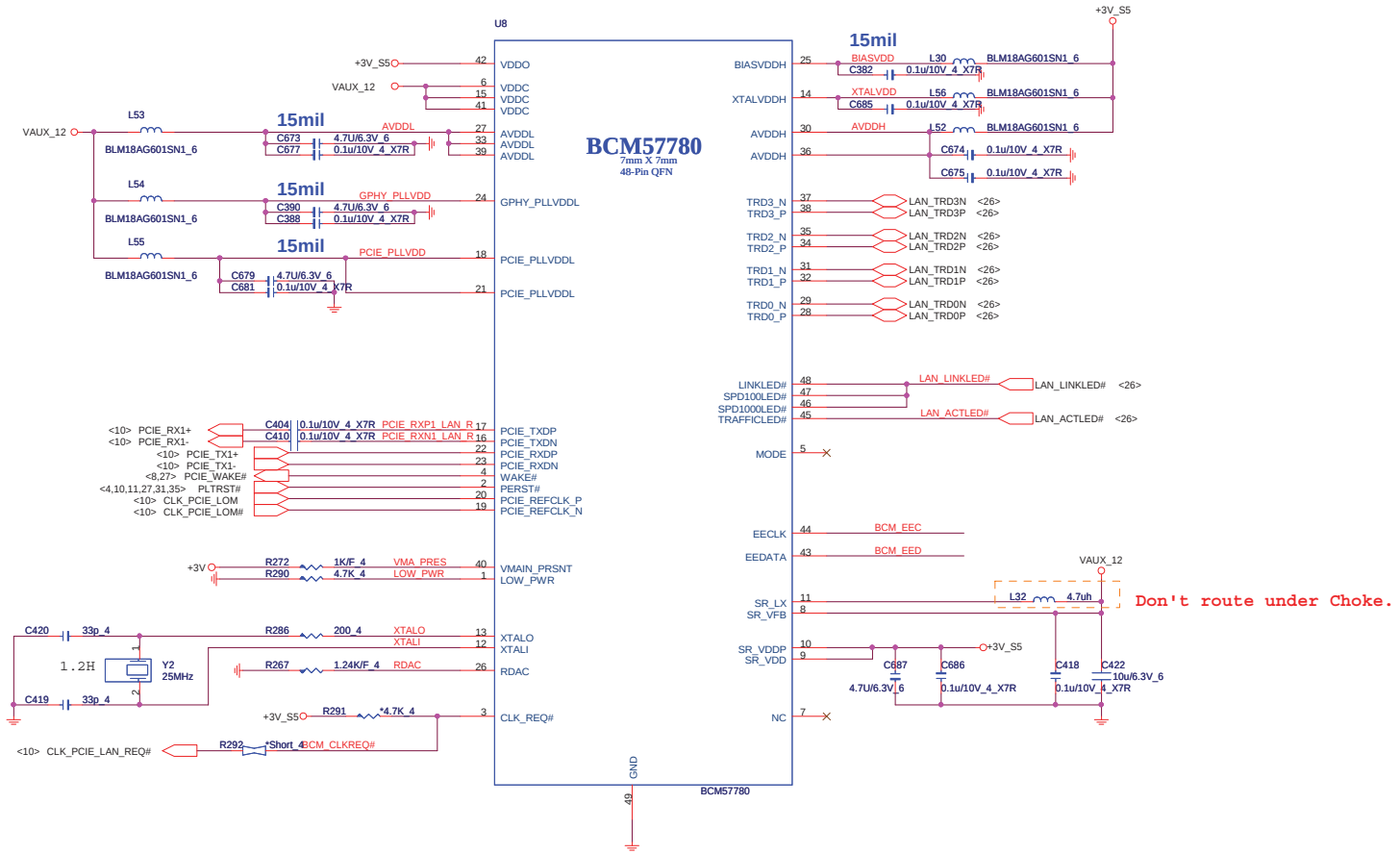

LAN POWER

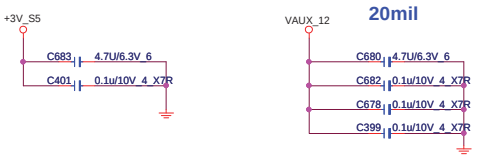

EEPROM

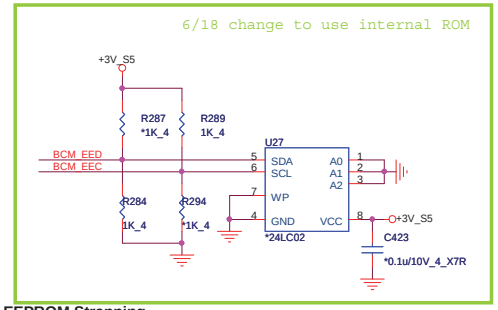

EEPROM Strapping

EEPROM Type	EECLK	EEDATA
24LC02	1	1
Internal	1	0

A version Still mount the EEPROM

Quanta Computer Inc.

PROJECT : ZQ9

Size	Document Number	Rev
	GLAN BCM57780	1A

Date: Tuesday, June 22, 2010 Sheet 25 of 45

TRANSFORMER

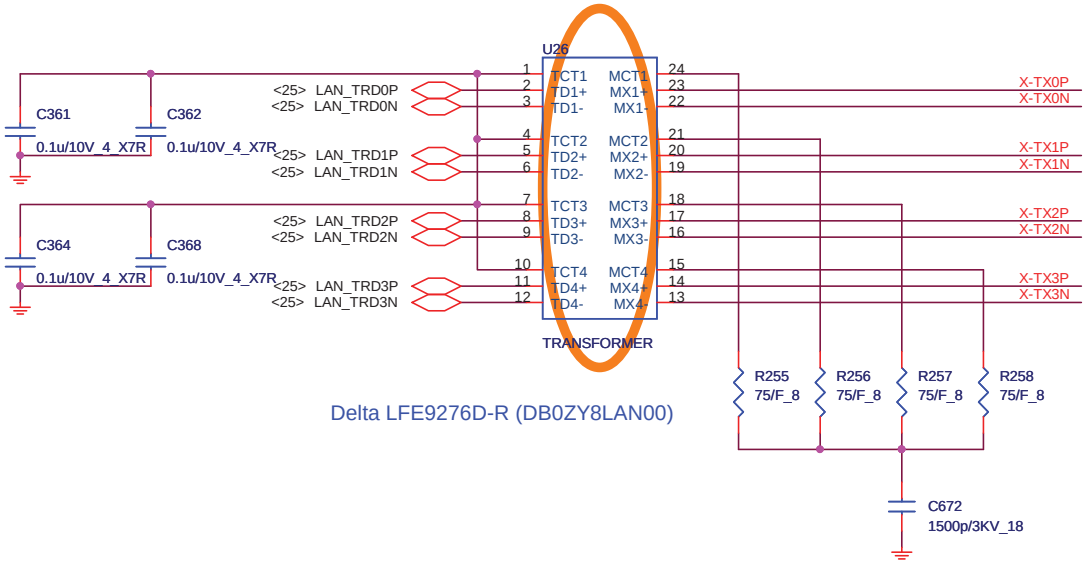

Delta LFE9276D-R (DB0ZY8LAN00)

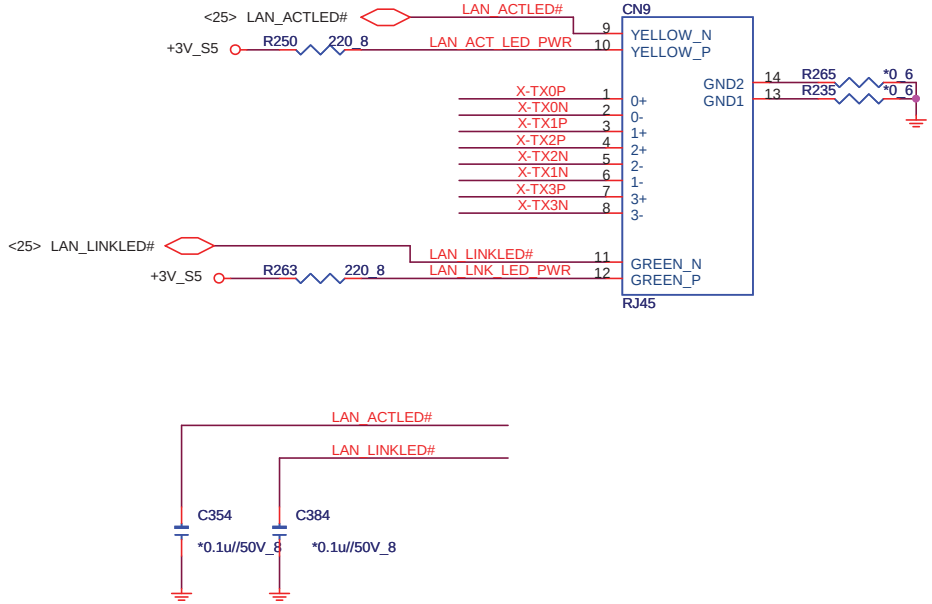

Quanta Computer Inc.		
PROJECT : ZQ9		
Size	Document Number: LAN Transformer and RJ45	Rev 1A
Date: Tuesday, June 22, 2010	Sheet 26 of 45	

MINI-CARD WLAN(MPC)

+3.3V: 1000mA
+3.3Vaux:330mA
+1.5V:500mA

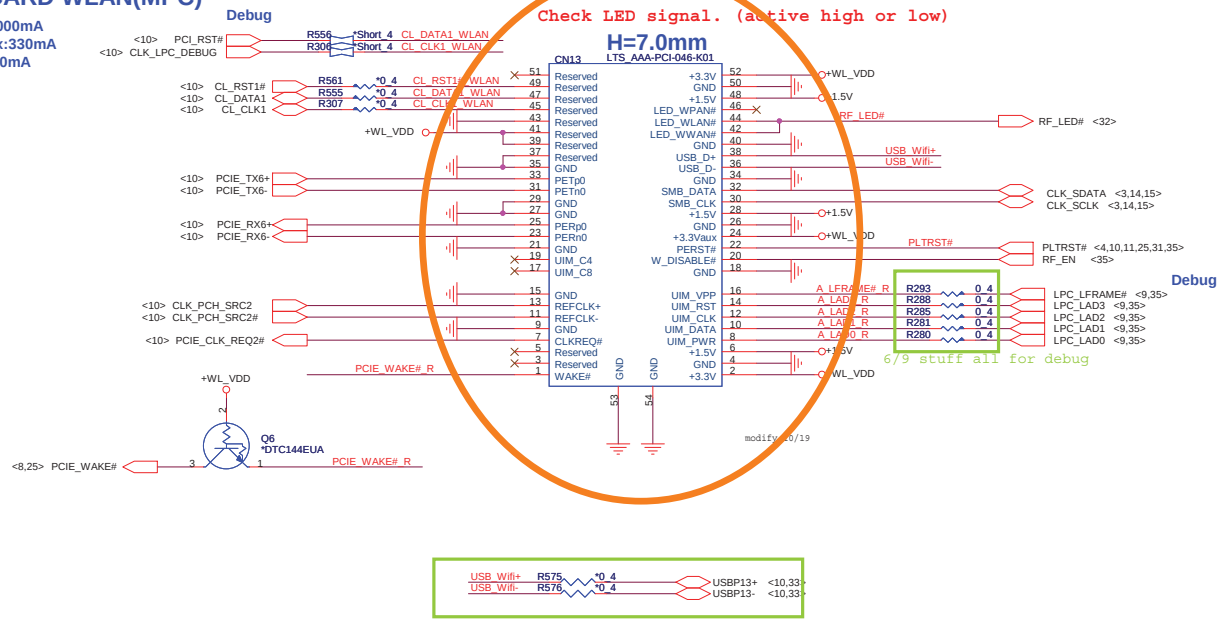

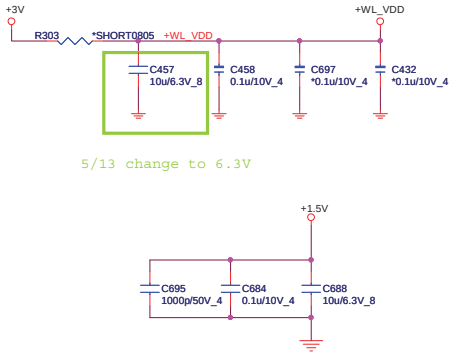

Quanta Computer Inc.		
PROJECT : ZQ9		
Size	Document Number	Rev
	MINI PCI-E card/TV	1A
Date: Tuesday, June 22, 2010	Sheet 27 of 45	

MAIN SATA HDD

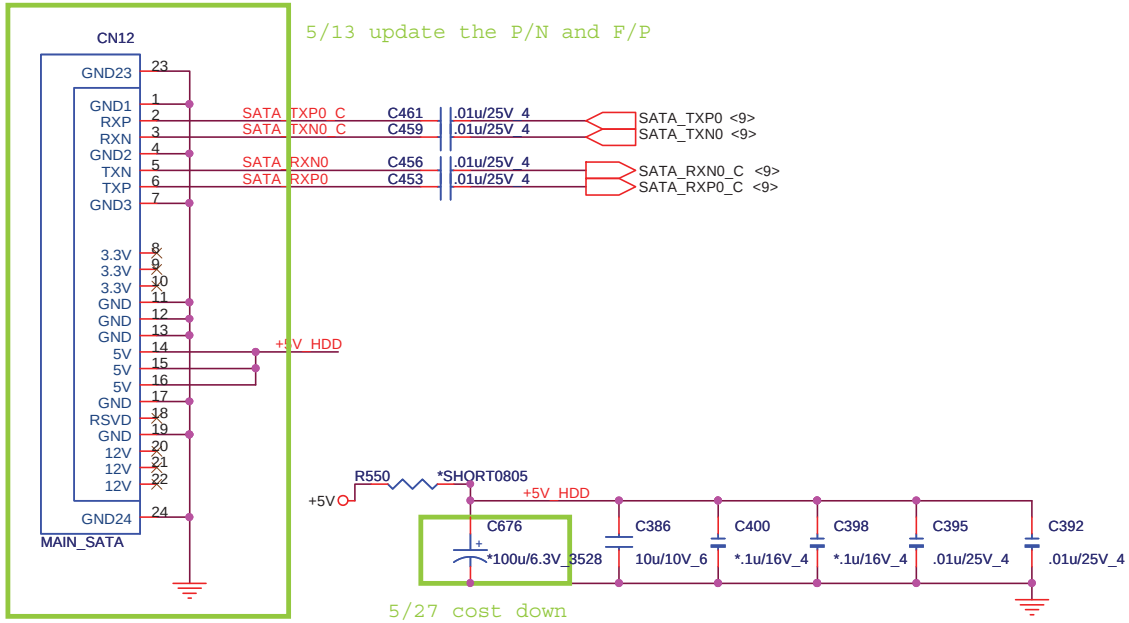

EE RETURN-PATH CAPACITORS

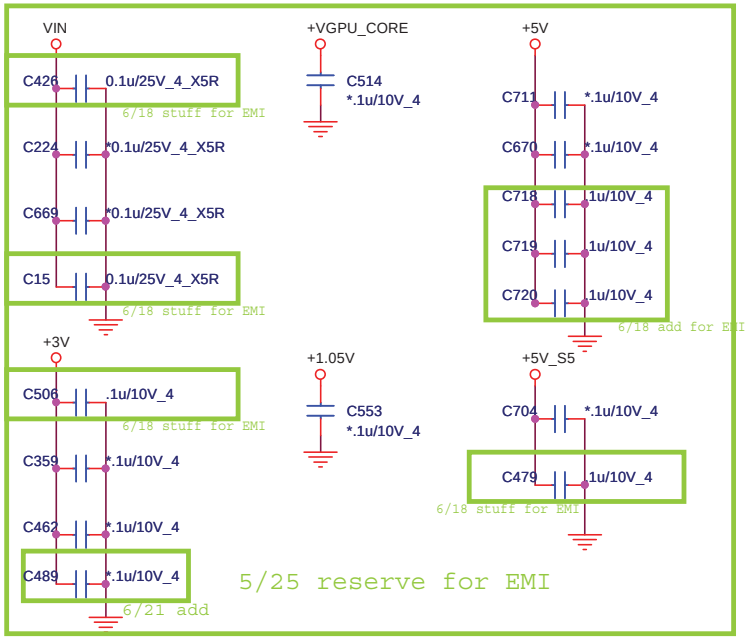

ODD (SATA)

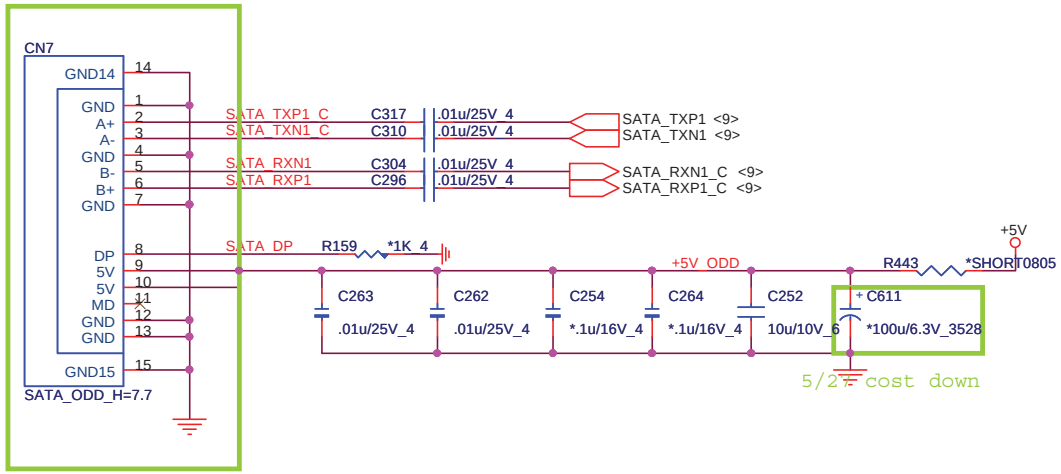

5/26 change the footprint

Quanta Computer Inc.

PROJECT : ZQ9

Size	Document Number	Rev
	SATA-HDD/ODD/USB-ESATA	1A

Date: Tuesday, June 22, 2010 Sheet 28 of 45

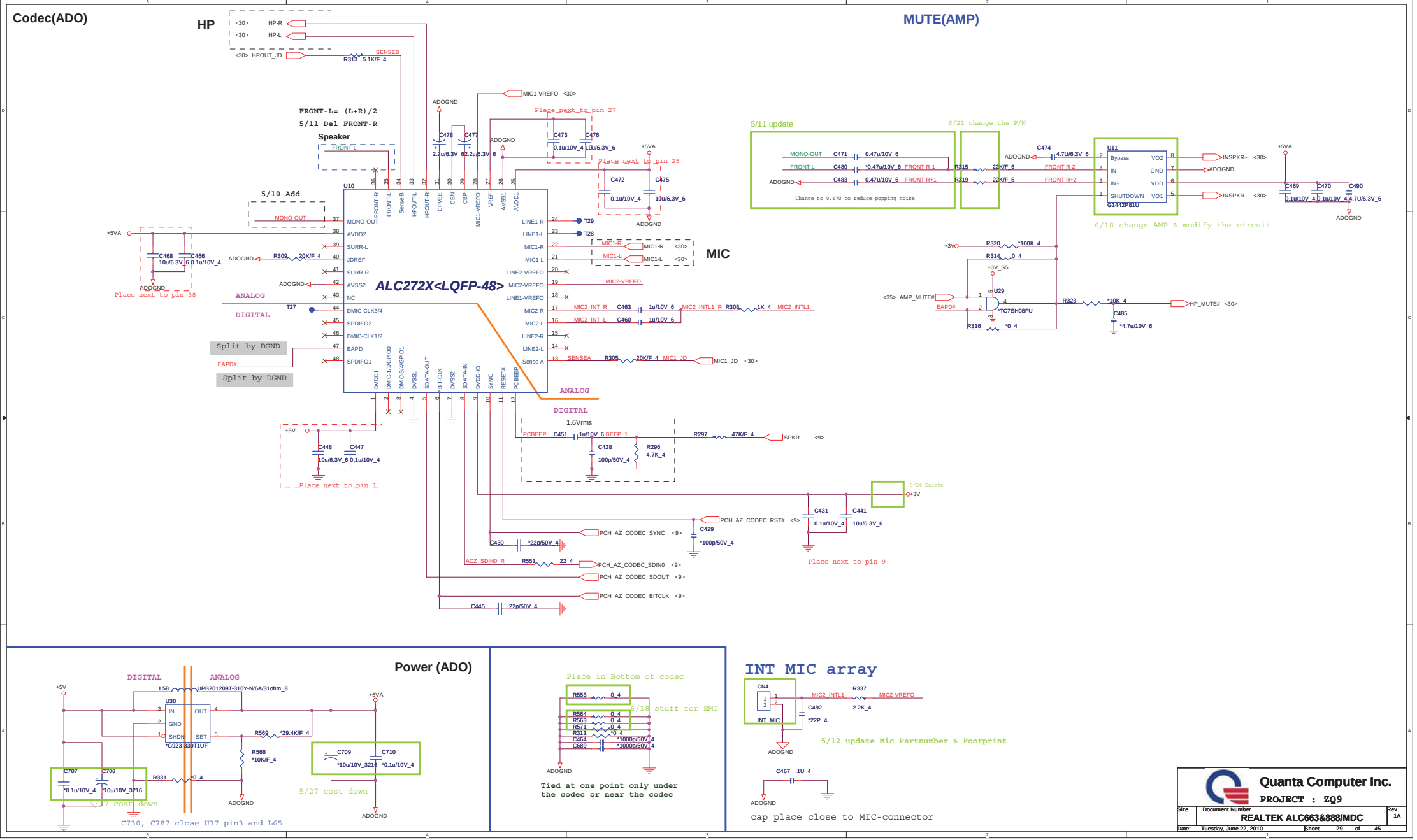

Quanta Computer Inc.

PROJECT : ZQ9

Size	Document Number	Rev
	REALTEK ALC663&888/MDC	1A

Date: Tuesday, June 22, 2010 Sheet 29 of 45

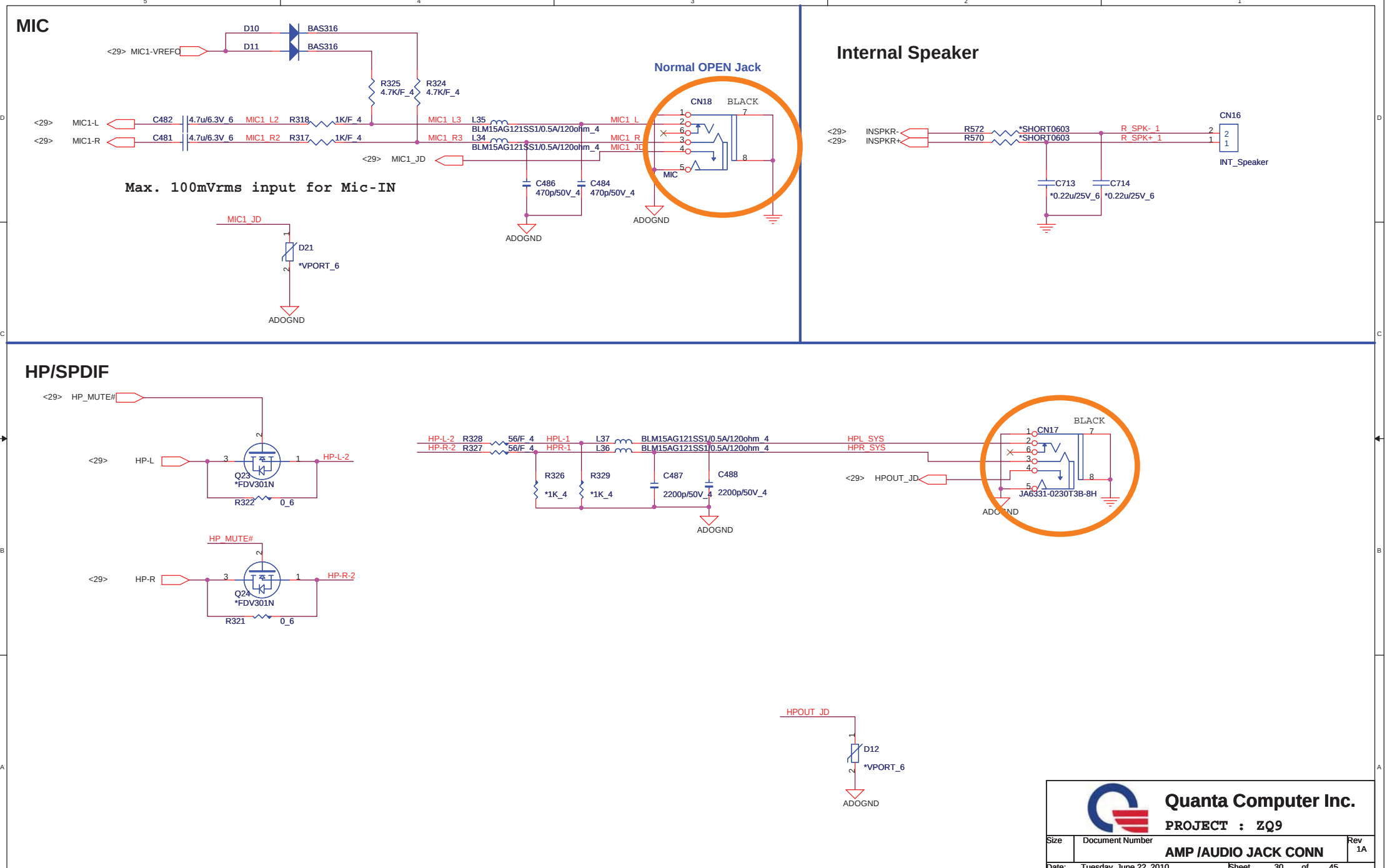
MIC
D10 BAS316
D11 BAS316
<29> MIC1-VREFO
R325 4.7K/F_4
R324 4.7K/F_4
Normal OPEN Jack
CN18 BLACK
<29> MIC1-L
<29> MIC1-R
C482 4.7u/6.3V_6
C481 4.7u/6.3V_6
MIC1_L2
MIC1_R2
R318 1K/F_4
R317 1K/F_4
MIC1_L3
MIC1_R3
L35 BLM15AG121SS1/0.5A/120ohm_4
L34 BLM15AG121SS1/0.5A/120ohm_4
MIC1_L
MIC1_R
MIC1_JD
<29> MIC1_JD
Max. 100mVrms input for Mic-IN
C486 470p/50V_4
C484 470p/50V_4
ADOGND
MIC
MIC1_JD
D21
*VPORT_6
ADOGND
Internal Speaker
<29> INSPKR-
<29> INSPKR+
R572 *SHORT0603
R570 *SHORT0603
R_SPK- 1
R_SPK+ 1
CN16
INT_Speaker
C713 *0.22u/25V_6
C714 *0.22u/25V_6
HP/SPDIF
<29> HP_MUTE#
<29> HP-L
Q23 *FDV301N
HP-L-2
R322 0_6
HP_MUTE#
<29> HP-R
Q24 *FDV301N
HP-R-2
R321 0_6
HP-L-2 R328 56/F_4
HP-R-2 R327 56/F_4
HPL-1
HPR-1
L37 BLM15AG121SS1/0.5A/120ohm_4
L36 BLM15AG121SS1/0.5A/120ohm_4
HPL_SYS
HPR_SYS
R326 *1K_4
R329 *1K_4
C487 2200p/50V_4
C488 2200p/50V_4
ADOGND
<29> HPOUT_JD
CN17 BLACK
JA6331-0230T3B-8H
ADOGND
HPOUT_JD
D12
*VPORT_6
ADOGND
Quanta Computer Inc.
PROJECT : ZQ9
Size
Document Number
AMP /AUDIO JACK CONN
Rev 1A
Date: Tuesday, June 22, 2010
Sheet 30 of 45

CARD READER Controller

2 IN 1 CARD READER (SD/MMC)

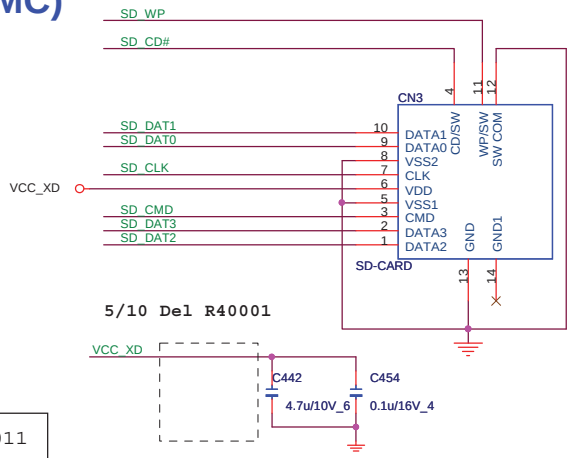

Close to CN14 pin 14 & pin23
4.7u CAP close to pin23

5/10 change Card Redaer conn
footpirnt sdcard-sdsn09-08-xa-11p-smt

Main	DFHS11FR011
Second	DFHS11FR033

Clock input selection
'1' for 48MHz input [Default,Internal PU]
'0' for 12MHz input

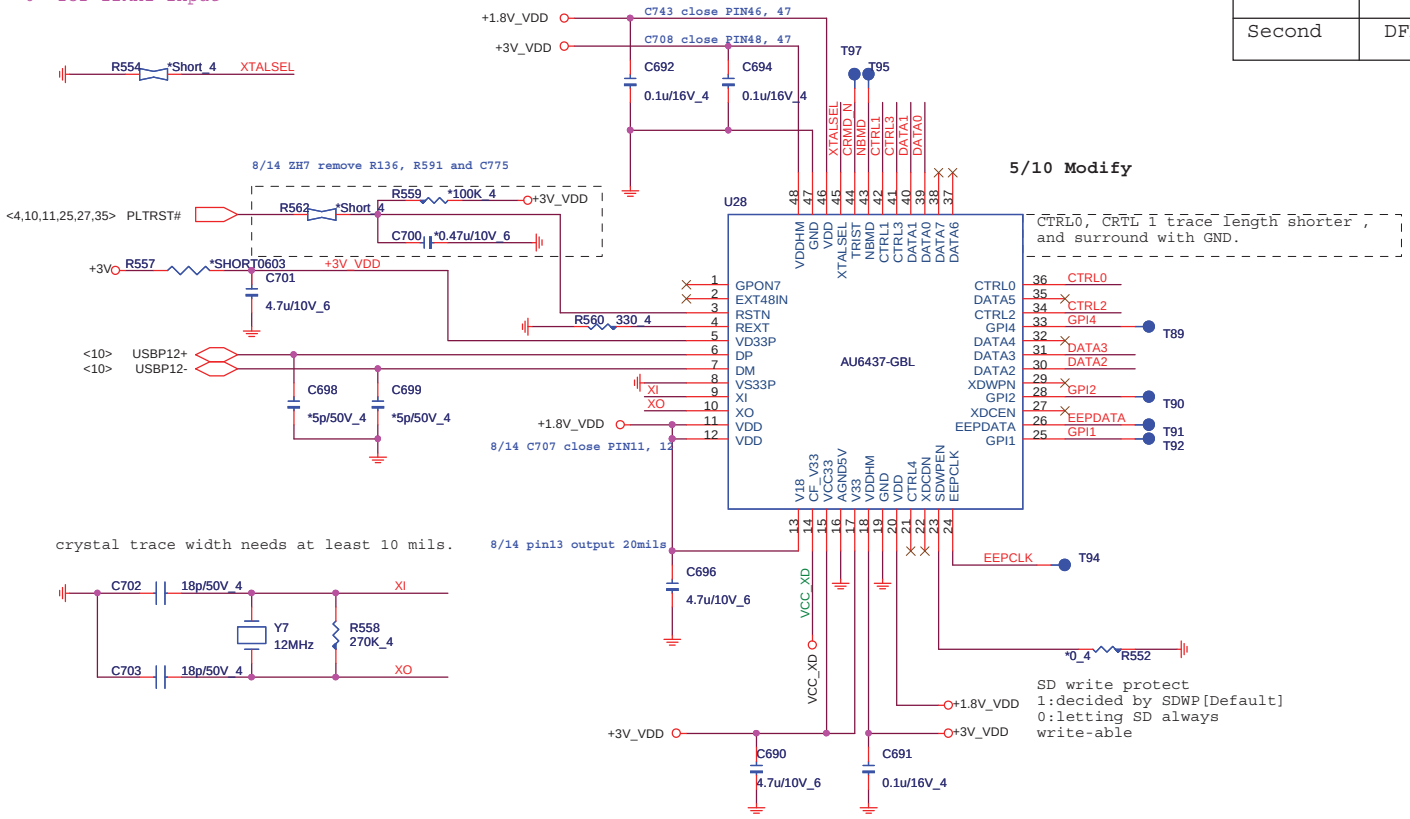

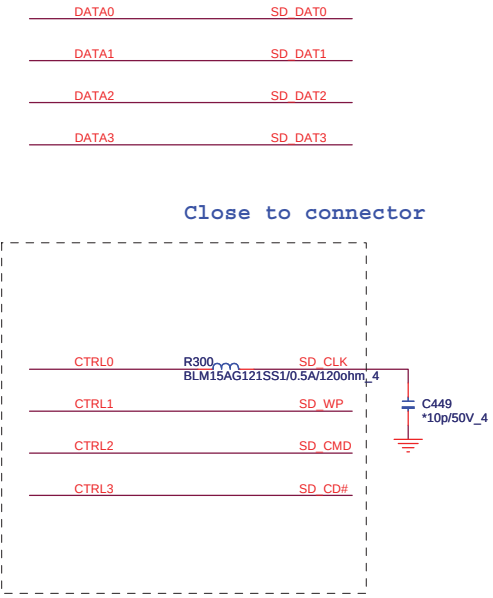

PROJECT : ZQ5
Quanta Computer Inc.

Size	Document Number	Rev
	AU6433 CardReader	1A
Date: Tuesday, June 22, 2010	Sheet 31 of 43	

LED

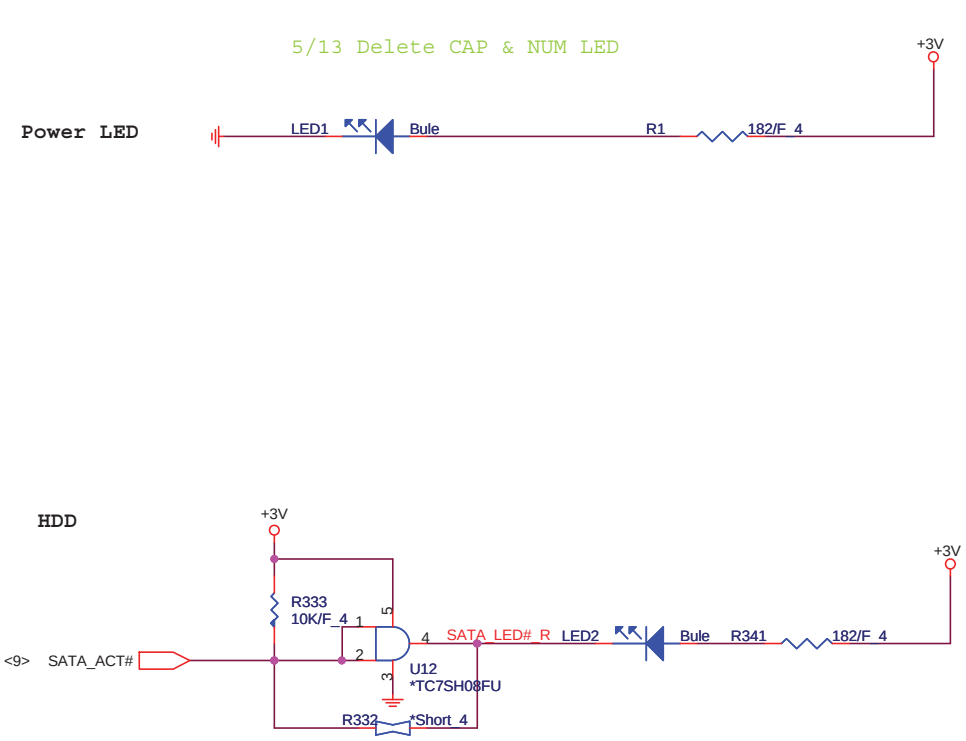

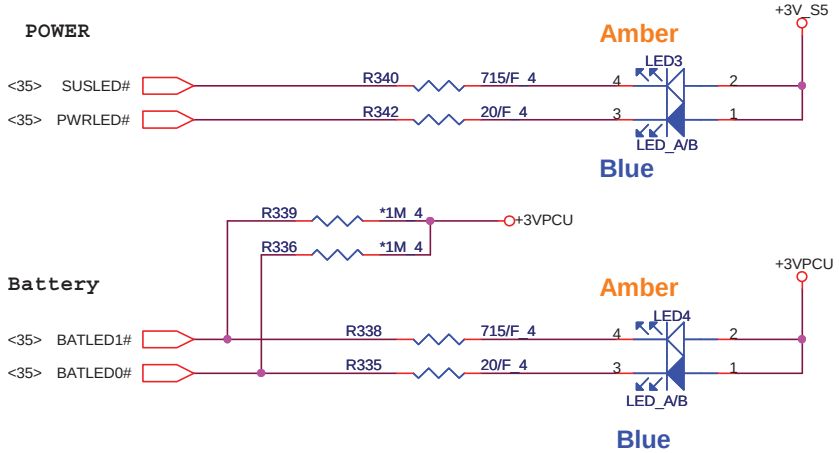

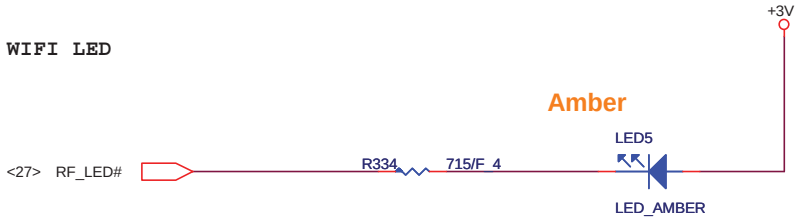

Quanta Computer Inc.

PROJECT : ZQ9

Size	Document Number	Rev
	POWER/MMB/LAUNCH/LED	1A

Date: Tuesday, June 22, 2010 Sheet 32 of 45

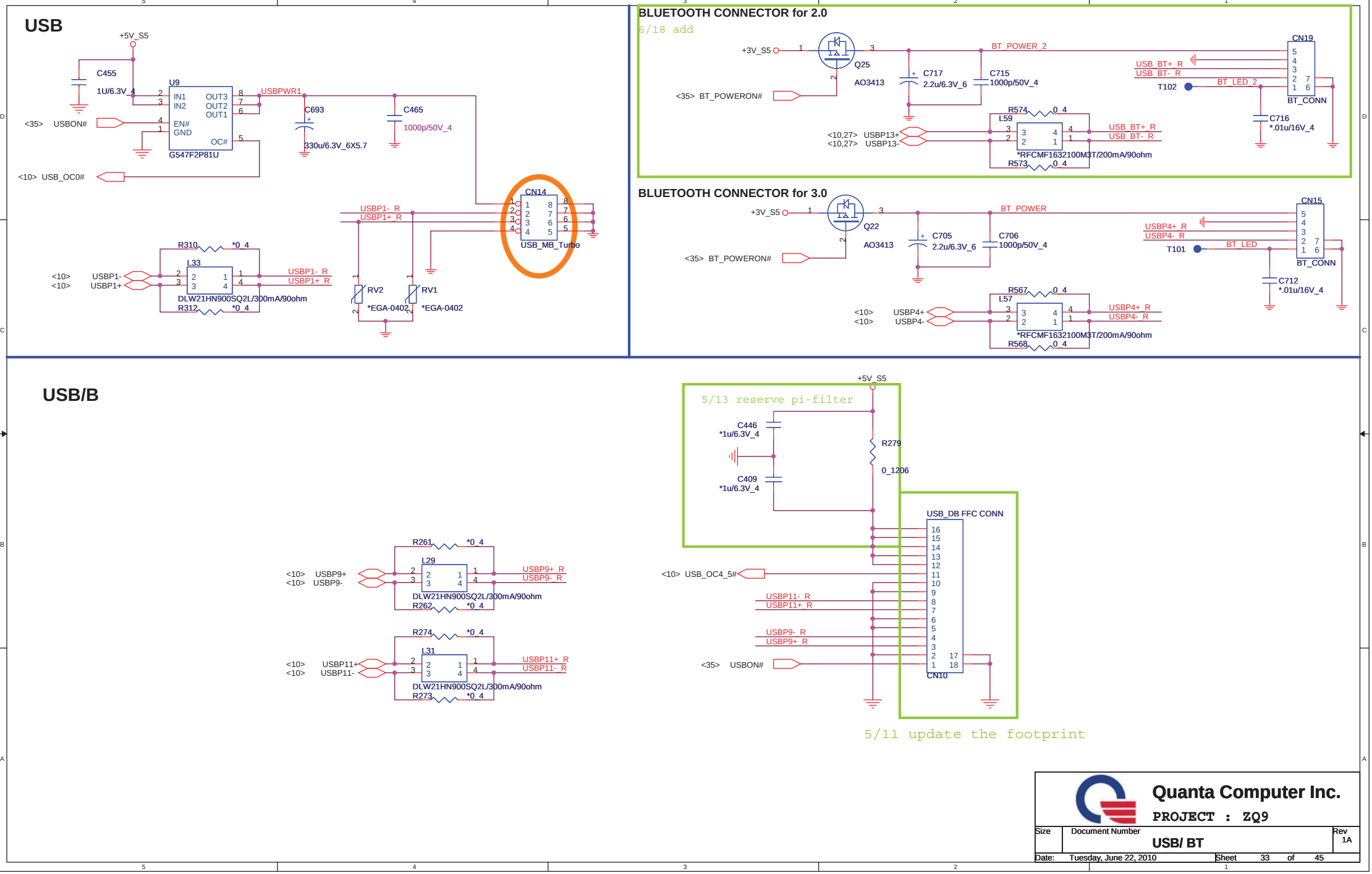

Quanta Computer Inc.

PROJECT : ZQ9

Size	Document Number	Rev
	USB/ BT	1A

Date: Tuesday, June 22, 2010 Sheet 33 of 45

K/B

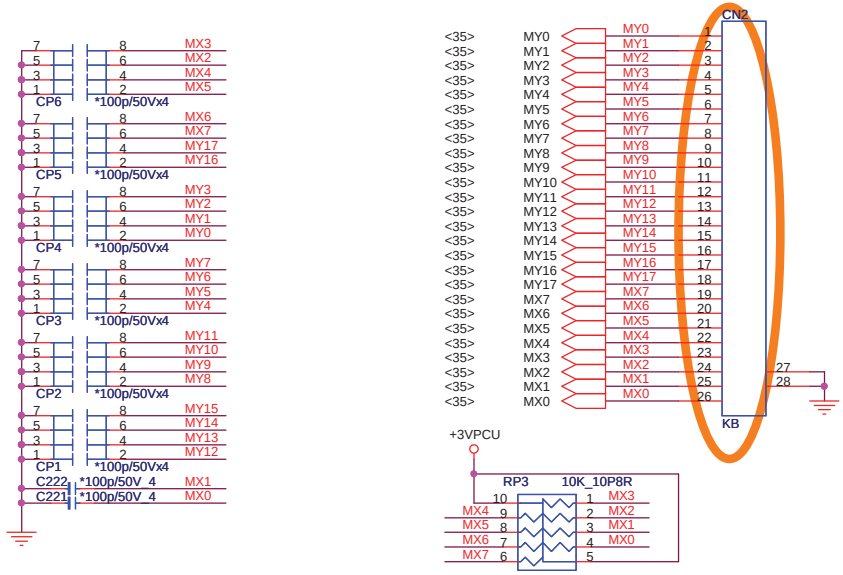

CPU FAN

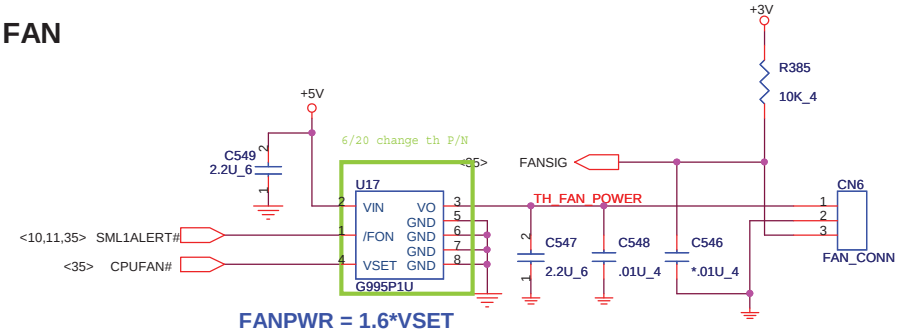

FANPWR = 1.6*VSET

TOUCHPAD & Switch CONN.

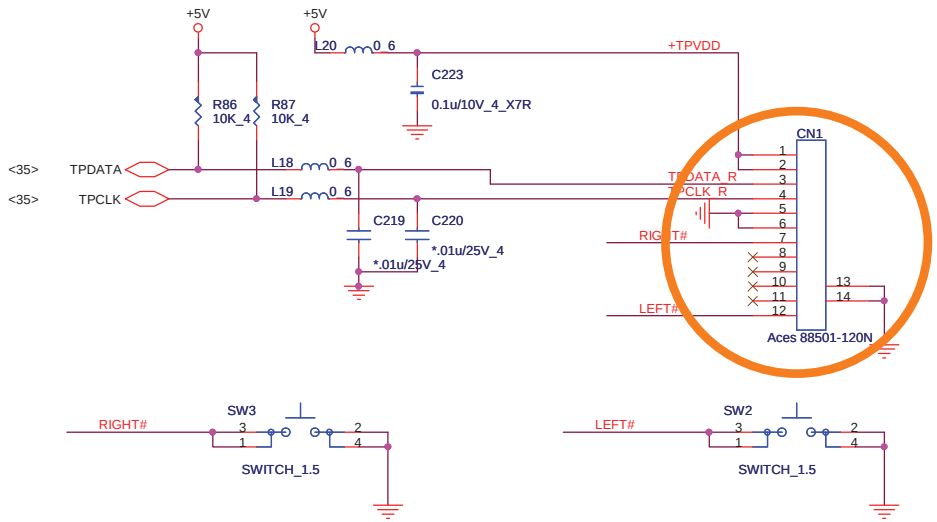

HOLE

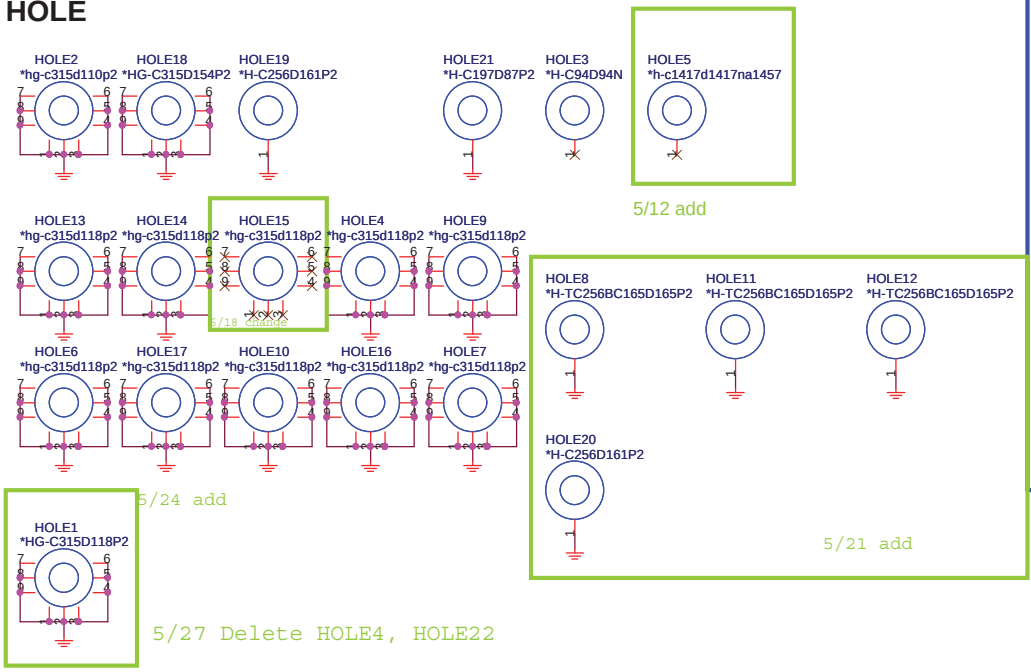

5/12 add

5/18 change

5/24 add

5/21 add

5/27 Delete HOLE4, HOLE22

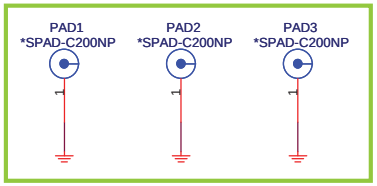

6/21 add

Quanta Computer Inc.

PROJECT : ZQ9

Size	Document Number	Rev
	KB/FAN/TP+FP	1A

Date: Tuesday, June 22, 2010 Sheet 34 of 45

EC(KBC)

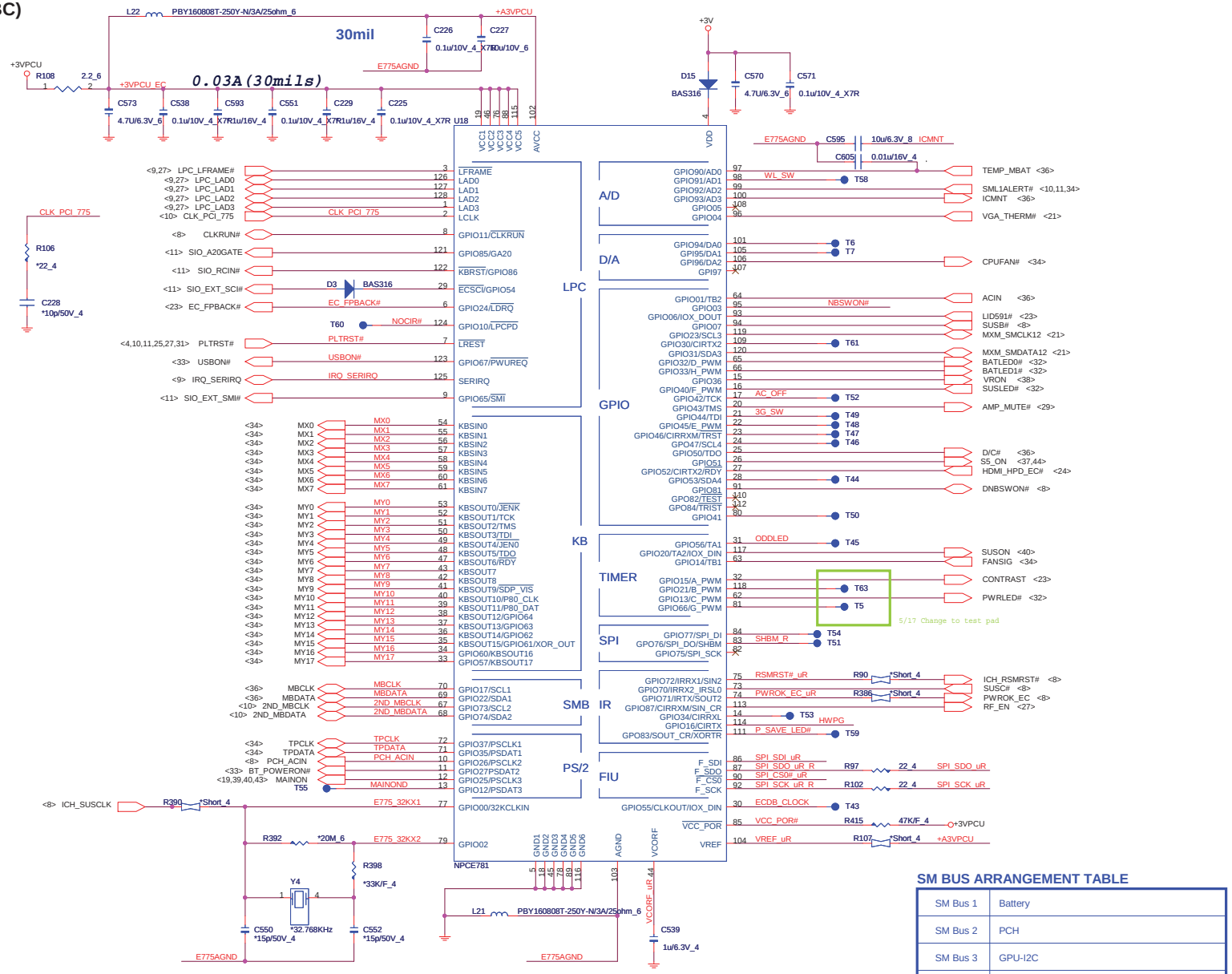

SM BUS ARRANGEMENT TABLE

SM Bus 1	Battery
SM Bus 2	PCH
SM Bus 3	GPU-I2C
SM Bus 4	N/A

I/O ADDRESS SETTING(KBC)

SHBM=0: Enable shared memory with host BIOS

SHBM — SHBM_R — R405 — 10K_4

1/13 Comfirm by vendor mail :
Disabled ('1') if using FWH device on LPC.
Enabled ('0') if using SPI flash for both system BIOS and EC firmware

SM BUS PU(KBC)

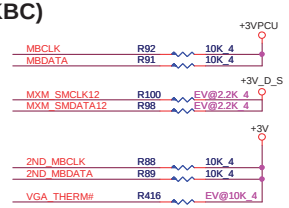

SPI FLASH(KBC)

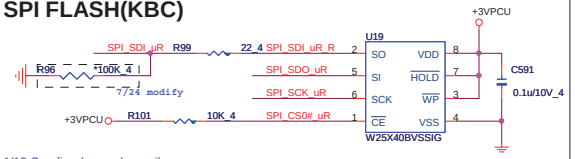

1/13 Comfirm by vendor mail :
If the Southbridge enables 'Long Wait Abort' by
default, the flash device should be 50MHz (or faster)

HWPG(KBC)

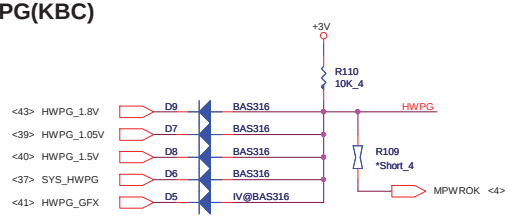

POWER-ON Switch(KBC)

INTERNAL KEYBOARD STRIP SET(KBC)

Quanta Computer Inc.

PROJECT : ZQ9

Size	Document Number	Rev
	WPCE781 & FLASH	1A

Date: Tuesday, June 22, 2010 Sheet 35 of 45

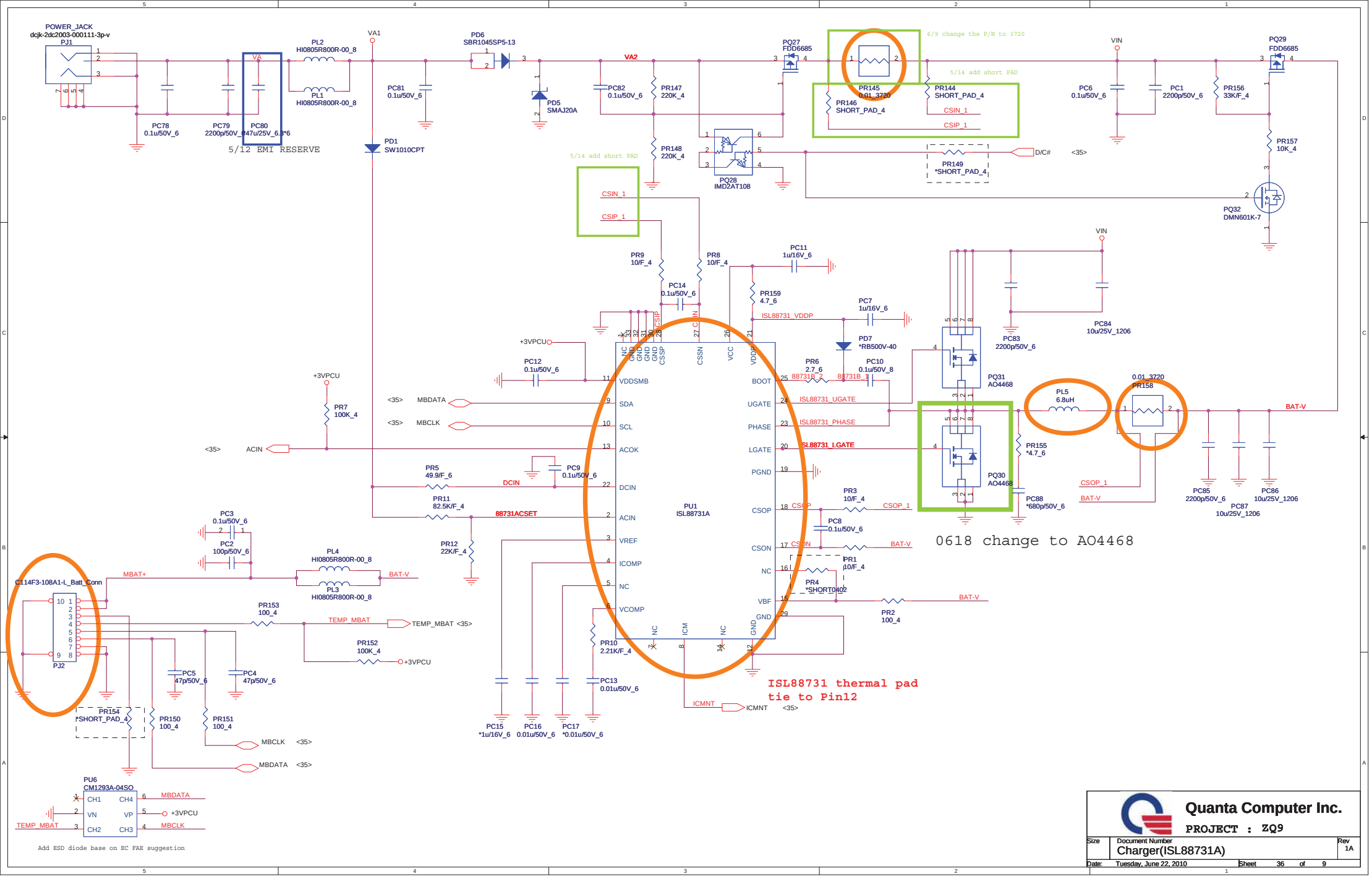
POWER_JACK
dcjk-2dc2003-000111-3p-v
PJ1
PL2
HI0805R800R-00_8
PL1
HI0805R800R-00_8
VA1
PD6
SBR1045SP5-13
PD5
SMAJ20A
PD1
SW1010CPT
PC78
0.1u/50V_6
PC79
2200p/50V_6
PC80
47u/25V_6.3*6
5/12 EMI RESERVE
PC81
0.1u/50V_6
VA2
PC82
0.1u/50V_6
PR147
220K_4
PR148
220K_4
PQ28
IMD2AT108
PQ27
FDD6685
6/9 change the P/N to 3720
PR145
0.01_3720
PR146
SHORT_PAD_4
PR144
SHORT_PAD_4
5/14 add short PAD
CSIN_1
CSIP_1
PR149
*SHORT_PAD_4
D/C#
<35>
VIN
PC6
0.1u/50V_6
PC1
2200p/50V_6
PQ29
FDD6685
PR156
33K/F_4
PR157
10K_4
PQ32
DMN601K-7
PR9
10/F_4
PR8
10/F_4
PC14
0.1u/50V_6
PC11
1u/16V_6
PR159
4.7_6
PC7
1u/16V_6
ISL88731_VDDP
PD7
*RB500V-40
PC10
0.1u/50V_8
PR6
2.7_6
88731B_2
88731B_1
PC12
0.1u/50V_6
+3VPCU
PR7
100K_4
<35> MBDATA
<35> MBCLK
<35> ACIN
PU1
ISL88731A
VDDSMB
SDA
SCL
ACOK
DCIN
ACIN
VREF
ICOMP
NC
VCOMP
BOOT
UGATE
PHASE
LGATE
PGND
CSOP
CSON
VBF
GND
CSSN
VCC
VDDP
CSSP
ICM
ISL88731_UGATE
ISL88731_PHASE
ISL88731_LGATE
PC83
2200p/50V_6
PC84
10u/25V_1206
PQ31
AO4468
PQ30
AO4468
PL5
6.8uH
0.01_3720
PR158
BAT-V
PR155
*4.7_6
PC88
*680p/50V_6
CSOP_1
PC85
2200p/50V_6
PC86
10u/25V_1206
PC87
10u/25V_1206
PR5
49.9/F_6
PC9
0.1u/50V_6
PR11
82.5K/F_4
88731ACSET
PR12
22K/F_4
PC3
0.1u/50V_6
PC2
100p/50V_6
PL4
HI0805R800R-00_8
PL3
HI0805R800R-00_8
MBAT+
PR3
10/F_4
PC8
0.1u/50V_6
PR1
10/F_4
PR4
*SHORT0402
PR2
100_4
0618 change to AO4468
C114F3-108A1-L_Batt_Conn
PJ2
PR153
100_4
TEMP_MBAT
TEMP_MBAT <35>
PR152
100K_4
PC5
47p/50V_6
PC4
47p/50V_6
PR154
*SHORT_PAD_4
PR150
100_4
PR151
100_4
MBCLK <35>
MBDATA <35>
PR10
2.21K/F_4
PC13
0.01u/50V_6
ICMNT
ICMNT <35>
PC15
*1u/16V_6
PC16
0.01u/50V_6
PC17
*0.01u/50V_6
ISL88731 thermal pad
tie to Pin12
PU6
CM1293A-04SO
CH1
CH4
VN
VP
CH2
CH3
MBDATA
+3VPCU
MBCLK
TEMP_MBAT
Add ESD diode base on EC FAE suggestion
Quanta Computer Inc.
PROJECT : ZQ9
Size
Document Number
Charger(ISL88731A)
Rev
1A
Date: Tuesday, June 22, 2010
Sheet 36 of 9

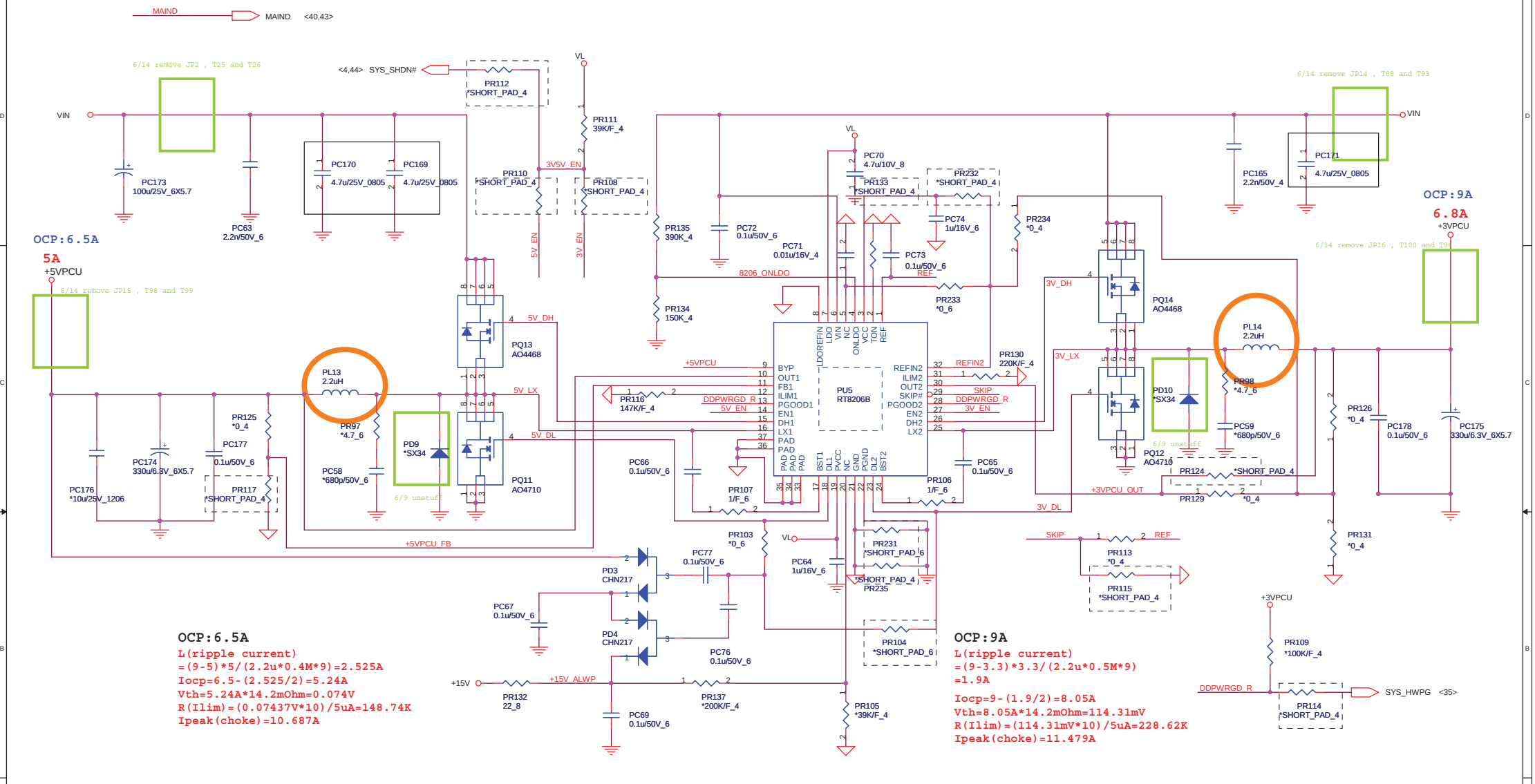

Quanta Computer Inc.

PROJECT : ZQ9

Size	Document Number	Rev
	SYSTEM 5V/3V (RT8206)	1A

Date: Tuesday, June 22, 2010 Sheet 37 of 9

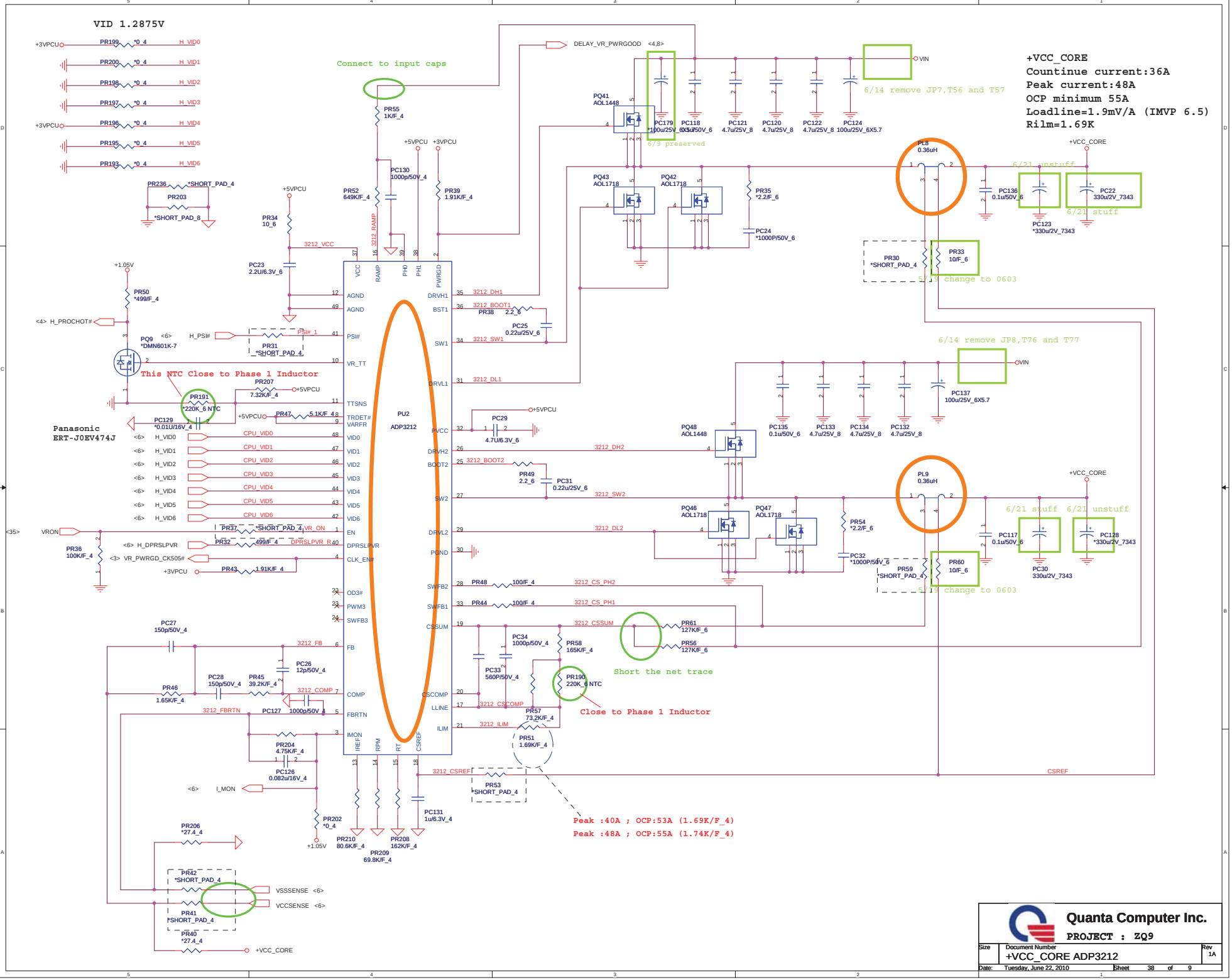
VID 1.2875V
+VCC_CORE
Countinue current:36A
Peak current:48A
OCP minimum 55A
Loadline=1.9mV/A (IMVP 6.5)
Rilm=1.69K
Connect to input caps
6/14 remove JP7,T56 and T57
6/9 preserved
6/21 unstuff
6/21 stuff
5/19 change to 0603
6/14 remove JP8,T76 and T77
This NTC Close to Phase 1 Inductor
Panasonic
ERT-J0EV474J
PU2
ADP3212
Short the net trace
Close to Phase 1 Inductor
Peak :40A ; OCP:53A (1.69K/F_4)
Peak :48A ; OCP:55A (1.74K/F_4)
Quanta Computer Inc.
PROJECT : ZQ9
+VCC_CORE ADP3212
Rev 1A
Date: Tuesday, June 22, 2010
Sheet 38 of 9

[PWM]

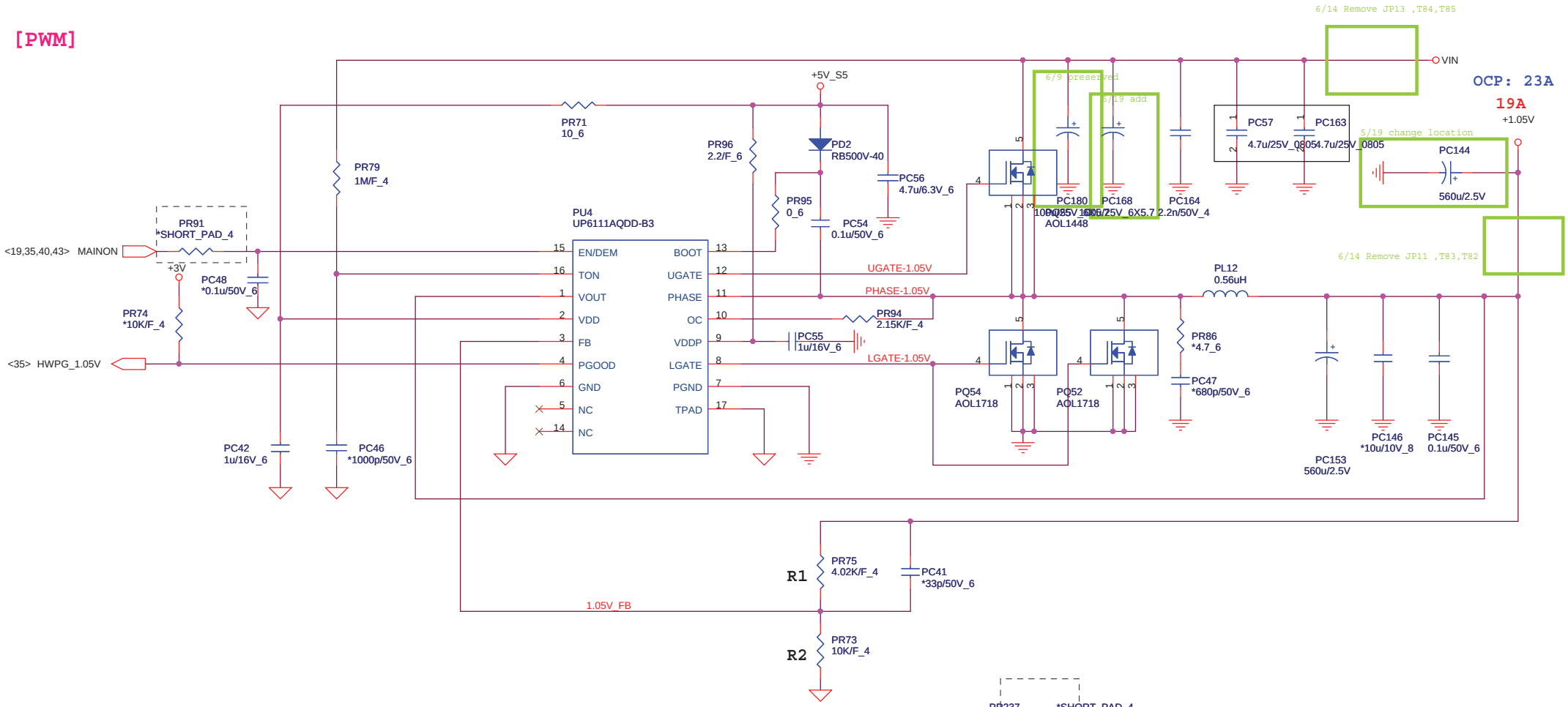

TON=3.85p*RTON*Vout/(Vin-0.5)

Frequency=Vout/(Vin*TON)

TON=3.85p*1M*1/(Vin-0.5)

Frequency=1/(0.0036767)=272K

AO1718 Rdson=3~4.3mOhm

L(ripple current)
=(19-1.05)*1.05/(0.56u*272k*19)
~6.512A

RILIM=2.15mohm*23-3.256/20uA=2.122Kohm

I(choke)peak=29.512A

Quanta Computer Inc.		
PROJECT : ZQ9		
Size	Document Number: +VTT (UP6111A)	Rev 1A
Date: Tuesday, June 22, 2010	Sheet 39 of 9	

[PWM]

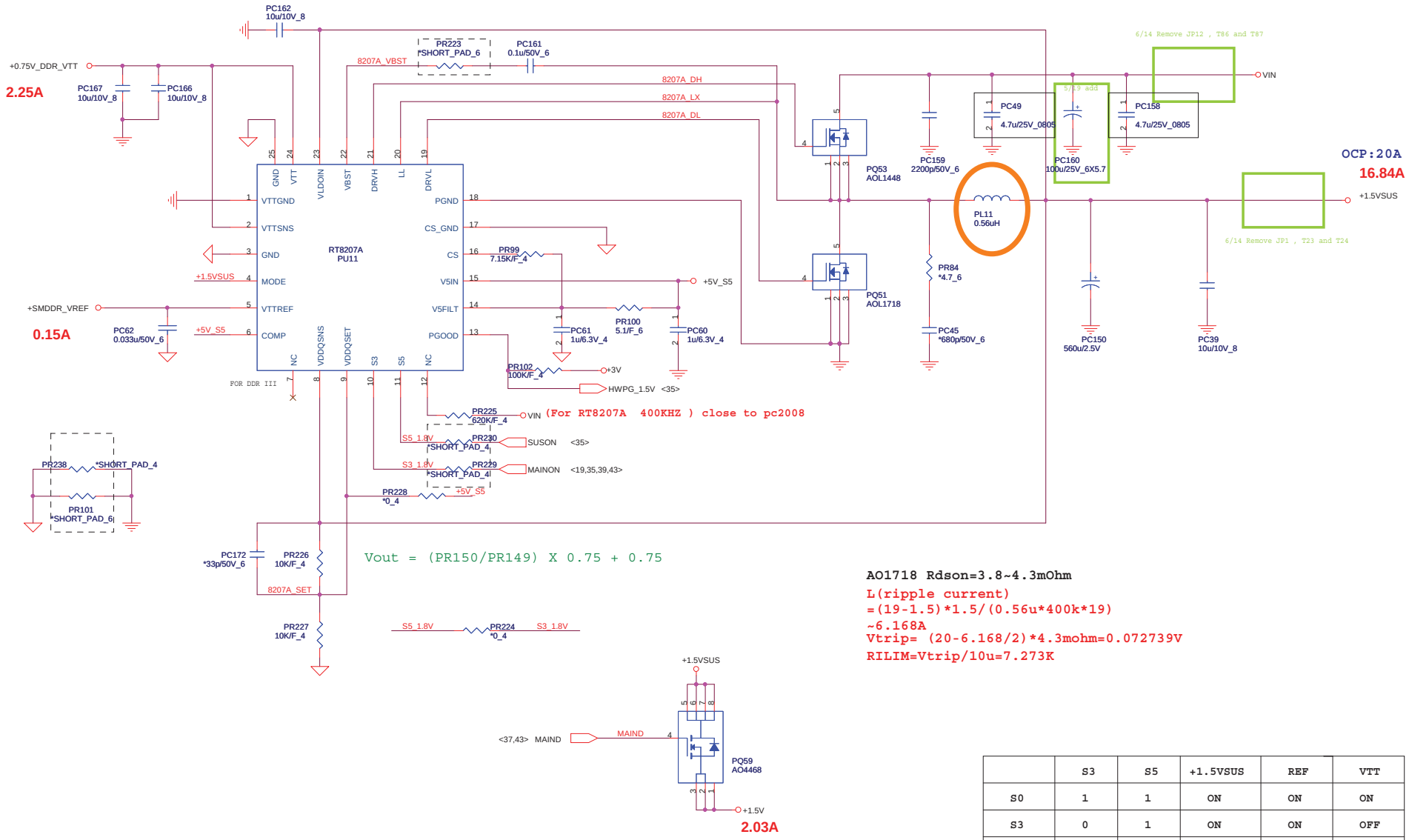

AO1718 Rdson=3.8~4.3mOhm

L(ripple current)
=(19-1.5)*1.5/(0.56u*400k*19)
~6.168A
Vtrip= (20-6.168/2)*4.3mohm=0.072739V
RILIM=Vtrip/10u=7.273K

	S3	S5	+1.5VSUS	REF	VTT
S0	1	1	ON	ON	ON
S3	0	1	ON	ON	OFF
S4/S5	0	0	OFF	OFF	OFF

Quanta Computer Inc.

PROJECT : ZQ9

Size	Document Number	Rev
	DDR 1.5V(RT8207A)	1A

Date: Tuesday, June 22, 2010 Sheet 40 of 9

Int_VGA [PWM]

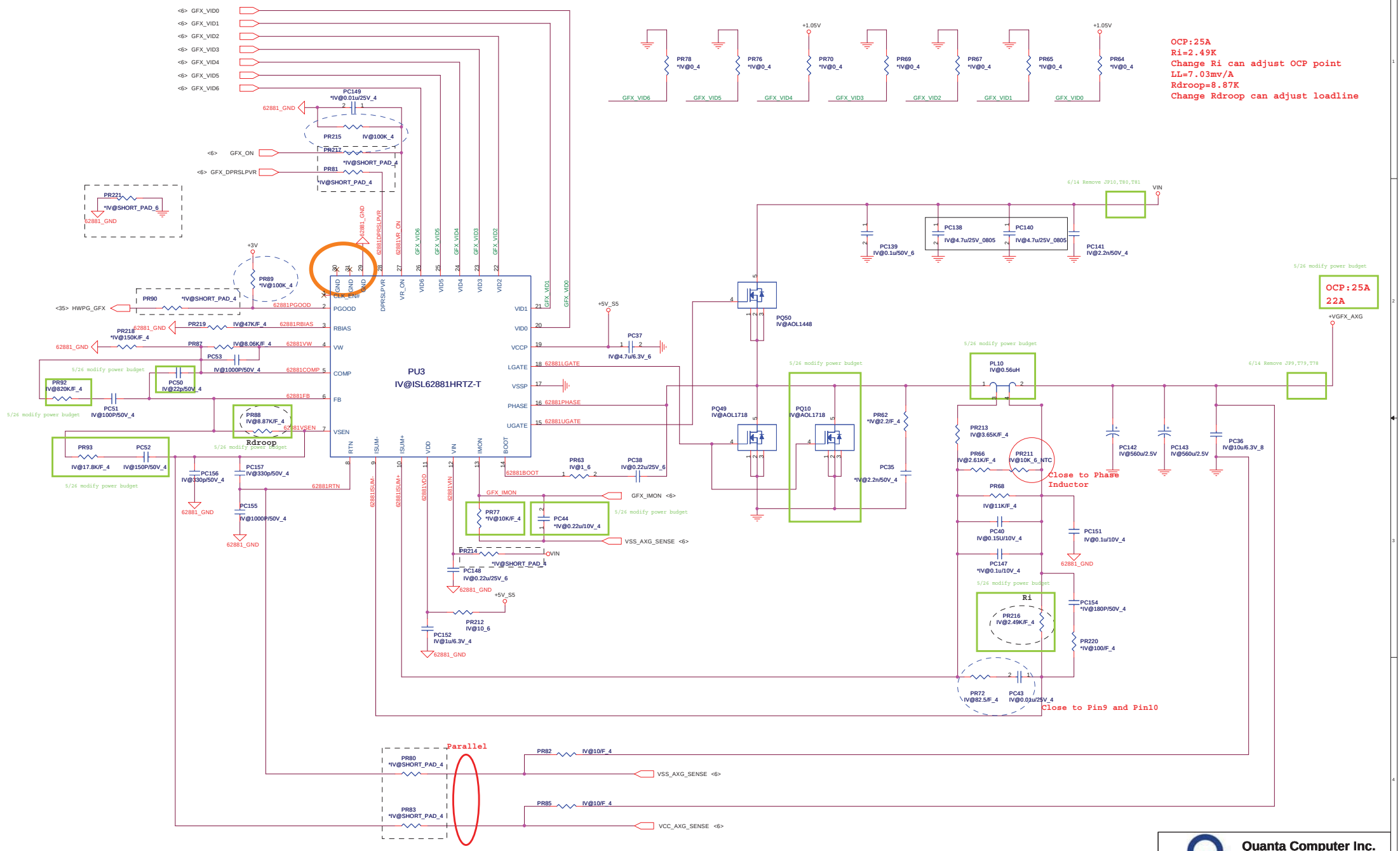

1.Level 1 Environment-related Substances Should NEVER be Used.
2.Purchase ink, paint, wire rods, and Molding resins only from the business Partners that Sony approves as Green Partners.

Quanta Computer Inc.

PROJECT : ZQ9

Size	Document Number	Rev
	+VGFX_AXG (ISL62881)	1A

Date: Tuesday, June 22, 2010 Sheet 41 of 9

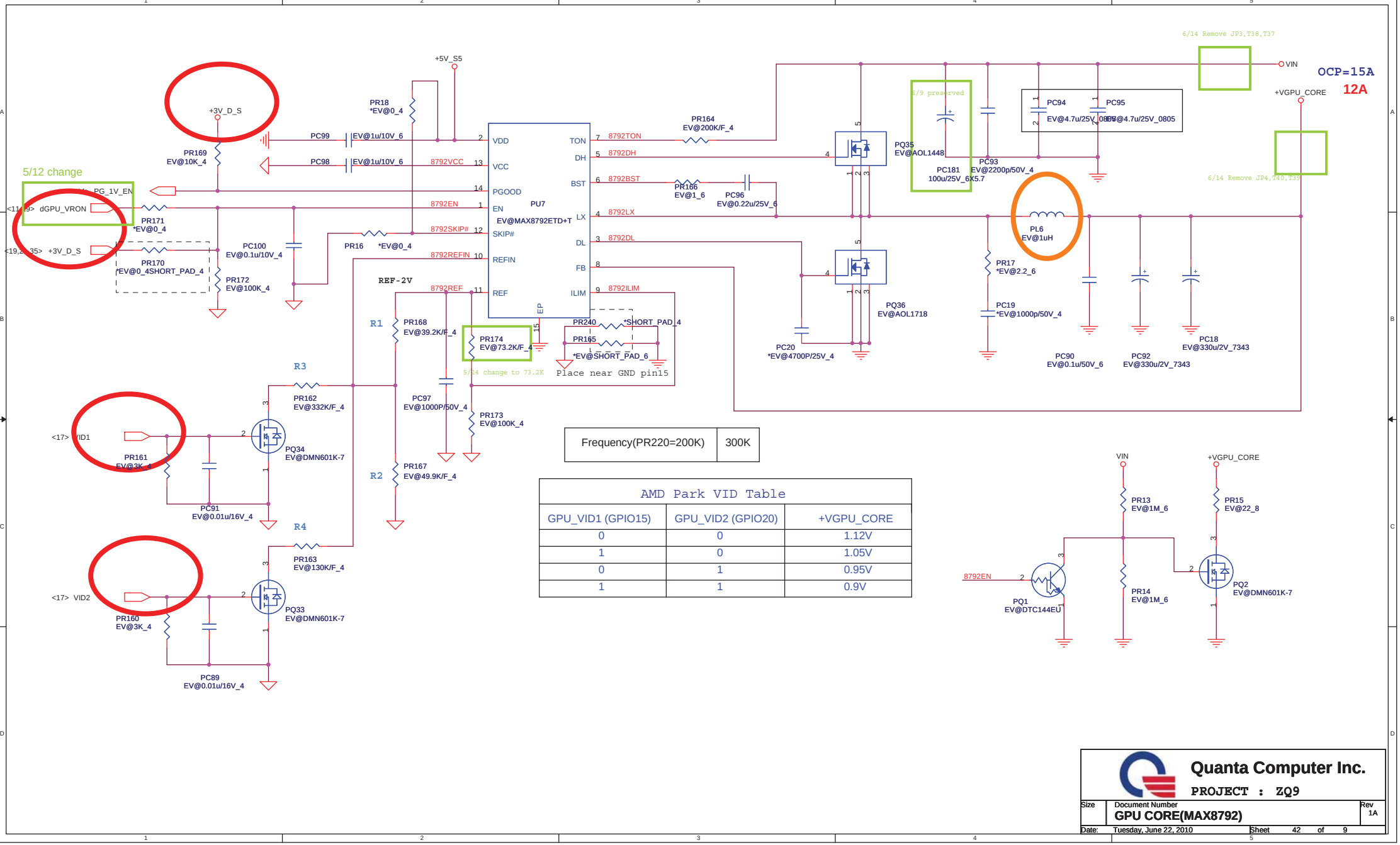

Frequency(PR220=200K)	300K

AMD Park VID Table

GPU_VID1 (GPIO15)	GPU_VID2 (GPIO20)	+VGPU_CORE
0	0	1.12V
1	0	1.05V
0	1	0.95V
1	1	0.9V

Quanta Computer Inc.

PROJECT : ZQ9

Size	Document Number	Rev
	GPU CORE(MAX8792)	1A

Date: Tuesday, June 22, 2010 Sheet 42 of 9

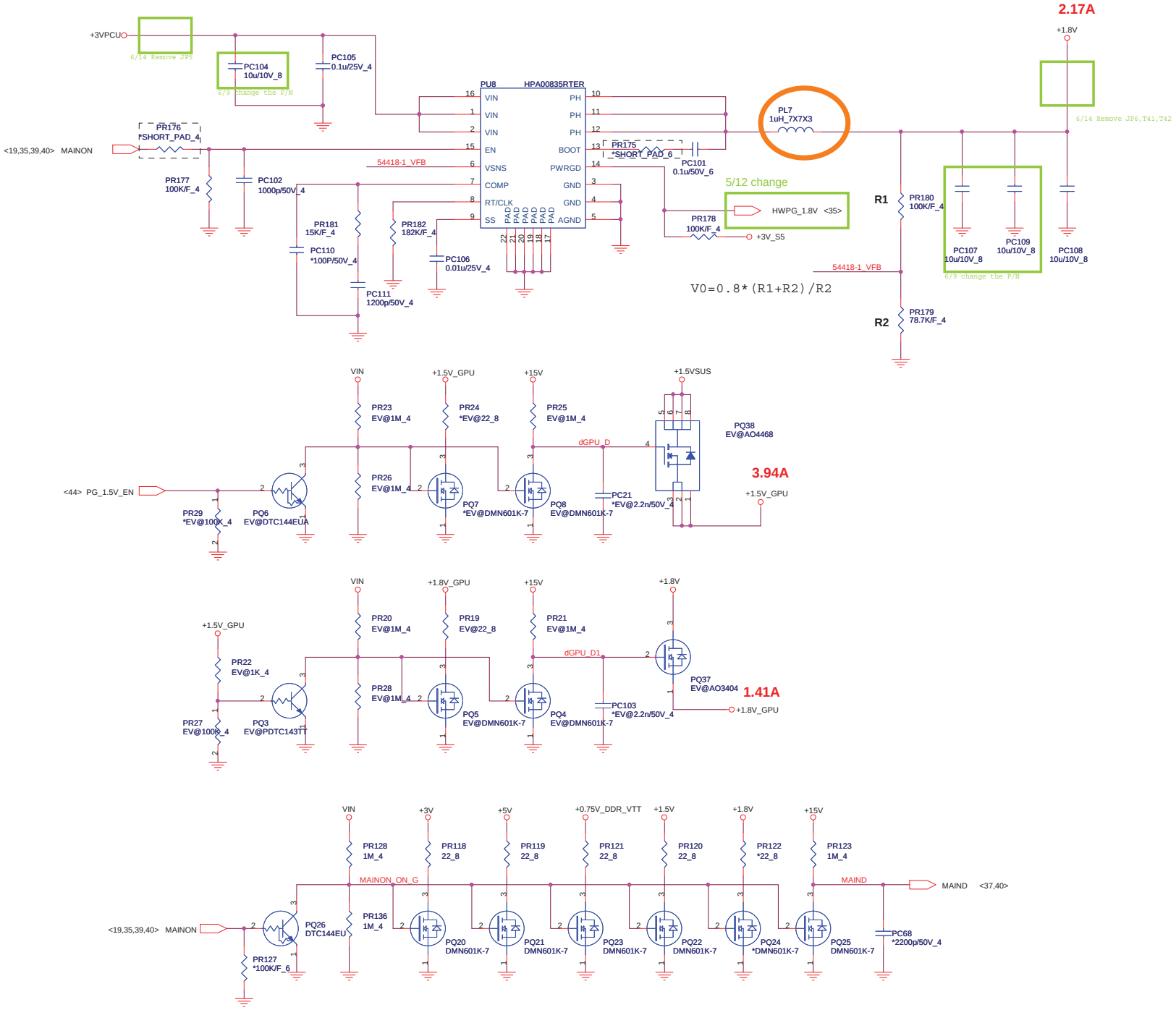

7/7 modify

Quanta Computer Inc.

PROJECT : ZQ9

Size	Document Number	Rev
	Discharge/1.8V)	1A

Date: Tuesday, June 22, 2010 Sheet 43 of 9

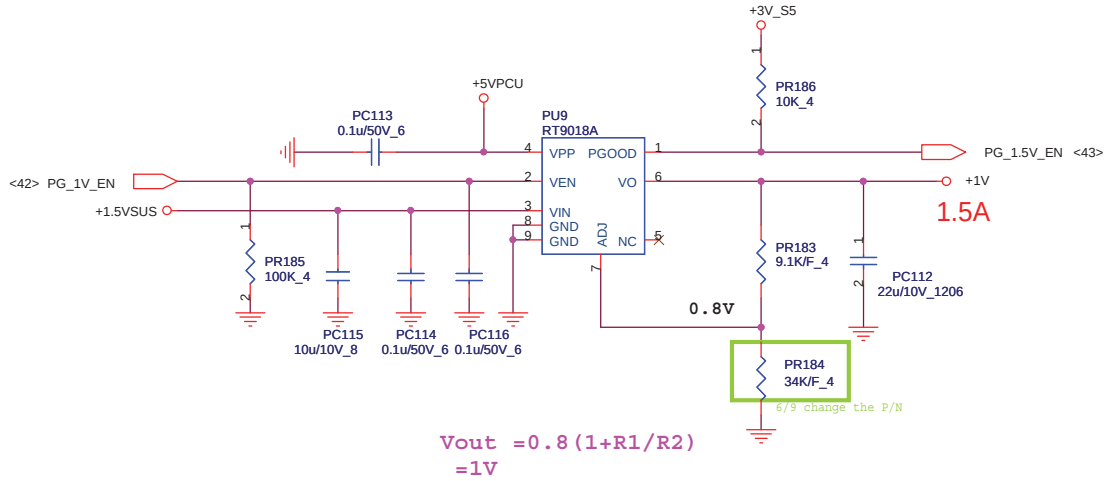

Vout =0.8(1+R1/R2)
=1V

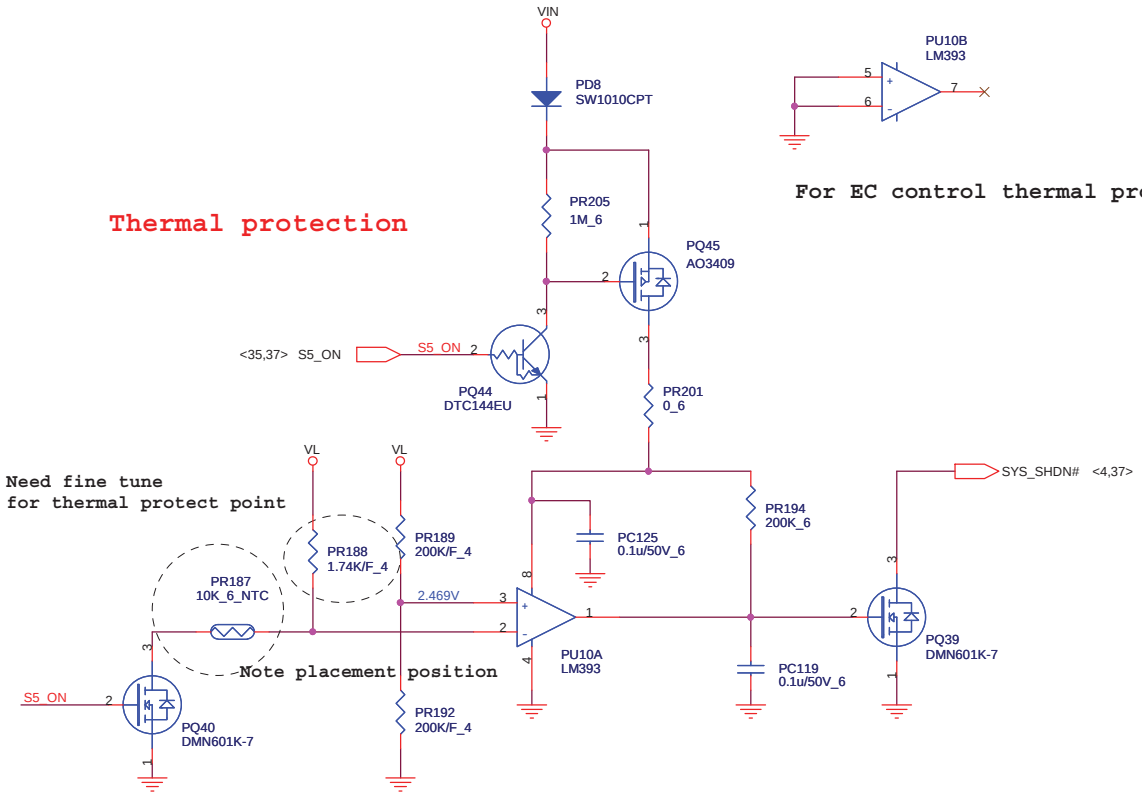

Thermal protection

For EC control thermal protection (output 3.3V)

Need fine tune
for thermal protect point

Note placement position

Quanta Computer Inc.		
PROJECT : ZQ9		
Size	Document Number	Rev 1A
Date: Tuesday, June 22, 2010	Sheet 44 of 9	

Model	REV	CHANGE LIST	ZQ9 DATE	ZQ9 By
ZQ9	1A	1.Add change BT for support 1G	8	CJA
		Delete Delete Delete Delete Keep	8	CJA
		Delete Delete Delete Delete Delete	8	CJA
		Delete Delete Delete Delete Delete		
		Keep Keep Keep Keep Keep		
		Keep Keep Keep Keep Keep		
		Keep Keep Keep Keep Keep	08	ROOT
		Keep Keep	08	ROOT
			08	ROOT
		2.Add DDR3 SO-Dimmsocket support Socket x 4M	08	ROOT
		Add Q2 for Power Control of DDR3	08	ROOT
		Change CPU DDR Interface and swap pin matrix	08	ROOT
		Change Q1 for Power Control of CPU	08	ROOT
			08	ROOT
		3.Fix Delete DC1551	08	ROOT
		Change DC1551 to TI-3V	08	ROOT
		Add Q3,R3 & R4R27 and add\off other components for changing +1V_S and +1V_S_S to +3V	08	ROOT
		Change Q4 for Power Control of +1V_S	08	ROOT
		Change Resistor of R5,R6, R8,R9, R10,R11, and add R8a,R11a	08	ROOT
		Add Q5,Q6,Q7,Q8,Q9,Q10,Q11,Q12,Q13,Q14,Q15,Q16,Q17,Q18,Q19,Q20,Q21,Q22,Q23,Q24,Q25,Q26,Q27,Q28,Q29,Q30	08	ROOT
		4.Fix Capacitor C4, C5, C6, C8, C9C7, C10A, C9A1, C9A2, C9A3, C9A4, C9A5, C9A6, C9A7, C9A8 for DDR	08	ROOT
			08	ROOT
		5.Add update BIOSROM & Bios Configure	08	ROOT
		add Q31C1 Change 3.3V of Socket, Ebatt, Crtscd, Ebatcs, Ebatdq, Ebatck, Ebatcs, Ebatd7, Crtscs	08	ROOT
			08	ROOT
		6.Fix Delete BT1RN, Ebatpwr	08	ROOT
			08	ROOT
			08	ROOT
			08	ROOT
			08	ROOT
			08	ROOT
			08	ROOT
			08	ROOT
	2A	1.Add ccd\ddr\ddr\ddr	08	ROOT
		2.Fix Change Q1,Q2,Q3,Q4,Q5,Q6,Q7,Q8,Q9,Q10,Q11,Q12,Q13,Q14,Q15,Q16,Q17,Q18,Q19,Q20,Q21,Q22,Q23,Q24,Q25,Q26,Q27,Q28,Q29,Q30	08	ROOT
		add Q31,Q32,Q33,Q34,Q35,Q36,Q37,Q38,Q39,Q40,Q41,Q42,Q43,Q44,Q45,Q46,Q47,Q48,Q49,Q50,Q51,Q52,Q53,Q54,Q55,Q56,Q57,Q58,Q59,Q60,Q61,Q62,Q63,Q64,Q65,Q66,Q67,Q68,Q69,Q70,Q71,Q72,Q73,Q74,Q75,Q76,Q77,Q78,Q79,Q80,Q81,Q82,Q83,Q84,Q85,Q86,Q87,Q88,Q89,Q90,Q91,Q92,Q93,Q94,Q95,Q96,Q97,Q98,Q99,Q100,Q101,Q102,Q103,Q104,Q105,Q106,Q107,Q108,Q109,Q110,Q111,Q112,Q113,Q114,Q115,Q116,Q117,Q118,Q119,Q120,Q121,Q122,Q123,Q124,Q125,Q126,Q127,Q128,Q129,Q130,Q131,Q132,Q133,Q134,Q135,Q136,Q137,Q138,Q139,Q140,Q141,Q142,Q143,Q144,Q145,Q146,Q147,Q148,Q149,Q150,Q151,Q152,Q153,Q154,Q155,Q156,Q157,Q158,Q159,Q160,Q161,Q162,Q163,Q164,Q165,Q166,Q167,Q168,Q169,Q170,Q171,Q172,Q173,Q174,Q175,Q176,Q177,Q178,Q179,Q180,Q181,Q182,Q183,Q184,Q185,Q186,Q187,Q188,Q189,Q190,Q191,Q192,Q193,Q194,Q195,Q196,Q197,Q198,Q199,Q200,Q201,Q202,Q203,Q204,Q205,Q206,Q207,Q208,Q209,Q210,Q211,Q212,Q213,Q214,Q215,Q216,Q217,Q218,Q219,Q220,Q221,Q222,Q223,Q224,Q225,Q226,Q227,Q228,Q229,Q230,Q231,Q232,Q233,Q234,Q235,Q236,Q237,Q238,Q239,Q240,Q241,Q242,Q243,Q244,Q245,Q246,Q247,Q248,Q249,Q250,Q251,Q252,Q253,Q254,Q255,Q256,Q257,Q258,Q259,Q260,Q261,Q262,Q263,Q264,Q265,Q266,Q267,Q268,Q269,Q270,Q271,Q272,Q273,Q274,Q275,Q276,Q277,Q278,Q279,Q280,Q281,Q282,Q283,Q284,Q285,Q286,Q287,Q288,Q289,Q290,Q291,Q292,Q293,Q294,Q295,Q296,Q297,Q298,Q299,Q300,Q301,Q302,Q303,Q304,Q305,Q306,Q307,Q308,Q309,Q310,Q311,Q312,Q313,Q314,Q315,Q316,Q317,Q318,Q319,Q320,Q321,Q322,Q323,Q324,Q325,Q326,Q327,Q328,Q329,Q330,Q331,Q332,Q333,Q334,Q335,Q336,Q337,Q338,Q339,Q340,Q341,Q342,Q343,Q344,Q345,Q346,Q347,Q348,Q349,Q350,Q351,Q352,Q353,Q354,Q355,Q356,Q357,Q358,Q359,Q360,Q361,Q362,Q363,Q364,Q365,Q366,Q367,Q368,Q369,Q370,Q371,Q372,Q373,Q374,Q375,Q376,Q377,Q378,Q379,Q380,Q381,Q382,Q383,Q384,Q385,Q386,Q387,Q388,Q389,Q390,Q391,Q392,Q393,Q394,Q395,Q396,Q397,Q398,Q399,Q400,Q401,Q402,Q403,Q404,Q405,Q406,Q407,Q408,Q409,Q410,Q411,Q412,Q413,Q414,Q415,Q416,Q417,Q418,Q419,Q420,Q421,Q422,Q423,Q424,Q425,Q426,Q427,Q428,Q429,Q430,Q431,Q432,Q433,Q434,Q435,Q436,Q437,Q438,Q439,Q440,Q441,Q442,Q443,Q444,Q445,Q446,Q447,Q448,Q449,Q450,Q451,Q452,Q453,Q454,Q455,Q456,Q457,Q458,Q459,Q460,Q461,Q462,Q463,Q464,Q465,Q466,Q467,Q468,Q469,Q470,Q471,Q472,Q473,Q474,Q475,Q476,Q477,Q478,Q479,Q480,Q481,Q482,Q483,Q484,Q485,Q486,Q487,Q488,Q489,Q490,Q491,Q492,Q493,Q494,Q495,Q496,Q497,Q498,Q499,Q500,Q501,Q502,Q503,Q504,Q505,Q506,Q507,Q508,Q509,Q510,Q511,Q512,Q513,Q514,Q515,Q516,Q517,Q518,Q519,Q520,Q521,Q522,Q523,Q524,Q525,Q526,Q527,Q528,Q529,Q530,Q531,Q532,Q533,Q534,Q535,Q536,Q537,Q538,Q539,Q540,Q541,Q542,Q543,Q544,Q545,Q546,Q547,Q548,Q549,Q550,Q551,Q552,Q553,Q554,Q555,Q556,Q557,Q558,Q559,Q560,Q561,Q562,Q563,Q564,Q565,Q566,Q567,Q568,Q569,Q570,Q571,Q572,Q573,Q574,Q575,Q576,Q577,Q578,Q579,Q580,Q581,Q582,Q583,Q584,Q585,Q586,Q587,Q588,Q589,Q590,Q591,Q592,Q593,Q594,Q595,Q596,Q597,Q598,Q599,Q600,Q601,Q602,Q603,Q604,Q605,Q606,Q607,Q608,Q609,Q610,Q611,Q612,Q613,Q614,Q615,Q616,Q617,Q618,Q619,Q620,Q621,Q622,Q623,Q624,Q625,Q626,Q627,Q628,Q629,Q630,Q631,Q632,Q633,Q634,Q635,Q636,Q637,Q638,Q639,Q640,Q641,Q642,Q643,Q644,Q645,Q646,Q647,Q648,Q649,Q650,Q651,Q652,Q653,Q654,Q655,Q656,Q657,Q658,Q659,Q660,Q661,Q662,Q663,Q664,Q665,Q666,Q667,Q668,Q669,Q670,Q671,Q672,Q673,Q674,Q675,Q676,Q677,Q678,Q679,Q680,Q681,Q682,Q683,Q684,Q685,Q686,Q687,Q688,Q689,Q690,Q691,Q692,Q693,Q694,Q695,Q696,Q697,Q698,Q699,Q700,Q701,Q702,Q703,Q704,Q705,Q706,Q707,Q708,Q709,Q710,Q711,Q712,Q713,Q714,Q715,Q716,Q717,Q718,Q719,Q720,Q721,Q722,Q723,Q724,Q725,Q726,Q727,Q728,Q729,Q730,Q731,Q732,Q733,Q734,Q735,Q736,Q737,Q738,Q739,Q740,Q741,Q742,Q743,Q744,Q745,Q746,Q747,Q748,Q749,Q750,Q751,Q752,Q753,Q754,Q755,Q756,Q757,Q758,Q759,Q760,Q761,Q762,Q763,Q764,Q765,Q766,Q767,Q768,Q769,Q770,Q771,Q772,Q773,Q774,Q775,Q776,Q777,Q778,Q779,Q780,Q781,Q782,Q783,Q784,Q785,Q786,Q787,Q788,Q789,Q790,Q791,Q792,Q793,Q794,Q795,Q796,Q797,Q798,Q799,Q800,Q801,Q802,Q803,Q804,Q805,Q806,Q807,Q808,Q809,Q810,Q811,Q812,Q813,Q814,Q815,Q816,Q817,Q818,Q819,Q820,Q821,Q822,Q823,Q824,Q825,Q826,Q827,Q828,Q829,Q830,Q831,Q832,Q833,Q834,Q835,Q836,Q837,Q838,Q839,Q840,Q841,Q842,Q843,Q844,Q845,Q846,Q847,Q848,Q849,Q850,Q851,Q852,Q853,Q854,Q855,Q856,Q857,Q858,Q859,Q860,Q861,Q862,Q863,Q864,Q865,Q866,Q867,Q868,Q869,Q870,Q871,Q872,Q873,Q874,Q875,Q876,Q877,Q878,Q879,Q880,Q881,Q882,Q883,Q884,Q885,Q886,Q887,Q888,Q889,Q890,Q891,Q892,Q893,Q894,Q895,Q896,Q897,Q898,Q899,Q900,Q901,Q902,Q903,Q904,Q905,Q906,Q907,Q908,Q909,Q910,Q911,Q912,Q913,Q914,Q915,Q916,Q917,Q918,Q919,Q920,Q921,Q922,Q923,Q924,Q925,Q926,Q927,Q928,Q929,Q930,Q931,Q932,Q933,Q934,Q935,Q936,Q937,Q938,Q939,Q940,Q941,Q942,Q943,Q944,Q945,Q946,Q947,Q948,Q949,Q950,Q951,Q952,Q953,Q954,Q955,Q956,Q957,Q958,Q959,Q960,Q961,Q962,Q963,Q964,Q965,Q966,Q967,Q968,Q969,Q970,Q971,Q972,Q973,Q974,Q975,Q976,Q977,Q978,Q979,Q980,Q981,Q982,Q983,Q984,Q985,Q986,Q987,Q988,Q989,Q990,Q991,Q992,Q993,Q994,Q995,Q996,Q997,Q998,Q999,Q1000,Q1001,Q1002,Q1003,Q1004,Q1005,Q1006,Q1007,Q1008,Q1009,Q1010,Q1011,Q1012,Q1013,Q1014,Q1015,Q1016,Q1017,Q1018,Q1019,Q1020,Q1021,Q1022,Q1023,Q1024,Q1025,Q1026,Q1027,Q1028,Q1029,Q1030,Q1031,Q1032,Q1033,Q1034,Q1035,Q1036,Q1037,Q1038,Q1039,Q1040,Q1041,Q1042,Q1043,Q1044,Q1045,Q1046,Q1047,Q1048,Q1049,Q1050,Q1051,Q1052,Q1053,Q1054,Q1055,Q1056,Q1057,Q1058,Q1059,Q1060,Q1061,Q1062,Q1063,Q1064,Q1065,Q1066,Q1067,Q1068,Q1069,Q1070,Q1071,Q1072,Q1073,Q1074,Q1075,Q1076,Q1077,Q1078,Q1079,Q1080,Q1081,Q1082,Q1083,Q1084,Q1085,Q1086,Q1087,Q1088,Q1089,Q1090,Q1091,Q1092,Q1093,Q1094,Q1095,Q1096,Q1097,Q1098,Q1099,Q1100,Q1101,Q1102,Q1103,Q1104,Q1105,Q1106,Q1107,Q1108,Q1109,Q1110,Q1111,Q1112,Q1113,Q1114,Q1115,Q1116,Q1117,Q1118,Q1119,Q1120,Q1121,Q1122,Q1123,Q1124,Q1125,Q1126,Q1127,Q1128,Q1129,Q1130,Q1131,Q1132,Q1133,Q1134,Q1135,Q1136,Q1137,Q1138,Q1139,Q1140,Q1141,Q1142,Q1143,Q1144,Q1145,Q1146,Q1147,Q1148,Q1149,Q1150,Q1151,Q1152,Q1153,Q1154,Q1155,Q1156,Q1157,Q1158,Q1159,Q1160,Q1161,Q1162,Q1163,Q1164,Q1165,Q1166,Q1167,Q1168,Q1169,Q1170,Q1171,Q1172,Q1173,Q1174,Q1175,Q1176,Q1177,Q1178,Q1179,Q1180,Q1181,Q1182,Q1183,Q1184,Q1185,Q1186,Q1187,Q1188,Q1189,Q1190,Q1191,Q1192,Q1193,Q1194,Q1195,Q1196,Q1197,Q1198,Q1199,Q1200,Q1201,Q1202,Q1203,Q1204,Q1205,Q1206,Q1207,Q1208,Q1209,Q1210,Q1211,Q1212,Q1213,Q1214,Q1215,Q1216,Q1217,Q1218,Q1219,Q1220,Q1221,Q1222,Q1223,Q1224,Q1225,Q1226,Q1227,Q1228,Q1229,Q1230,Q1231,Q1232,Q1233,Q1234,Q1235,Q1236,Q1237,Q1238,Q1239,Q1240,Q1241,Q1242,Q1243,Q1244,Q1245,Q1246,Q1247,Q1248,Q1249,Q1250,Q1251,Q1252,Q1253,Q1254,Q1255,Q1256,Q1257,Q1258,Q1259,Q1260,Q1261,Q1262,Q1263,Q1264,Q1265,Q1266,Q1267,Q1268,Q1269,Q1270,Q1271,Q1272,Q1273,Q1274,Q1275,Q1276,Q1277,Q1278,Q1279,Q1280,Q1281,Q1282,Q1283,Q1284,Q1285,Q1286,Q1287,Q1288,Q1289,Q1290,Q1291,Q1292,Q1293,Q1294,Q1295,Q1296,Q1297,Q1298,Q1299,Q1300,Q1301,Q1302,Q1303,Q1304,Q1305,Q1306,Q1307,Q1308,Q1309,Q1310,Q1311,Q1312,Q1313,Q1314,Q1315,Q1316,Q1317,Q1318,Q1319,Q1320,Q1321,Q1322,Q1323,Q1324,Q1325,Q1326,Q1327,Q1328,Q1329,Q1330,Q1331,Q1332,Q1333,Q1334,Q1335,Q1336,Q1337,Q1338,Q1339,Q1340,Q1341,Q1342,Q1343,Q1344,Q1345,Q1346,Q1347,Q1348,Q1349,Q1350,Q1351,Q1352,Q1353,Q1354,Q1355,Q1356,Q1357,Q1358,Q1359,Q1360,Q1361,Q1362,Q1363,Q1364,Q1365,Q1366,Q1367,Q1368,Q1369,Q1370,Q1371,Q1372,Q1373,Q1374,Q1375,Q1376,Q1377,Q1378,Q1379,Q1380,Q1381,Q1382,Q1383,Q1384,Q1385,Q1386,Q1387,Q1388,Q1389,Q1390,Q1391,Q1392,Q1393,Q1394,Q1395,Q1396,Q1397,Q1398,Q1399,Q1400,Q1401,Q1402,Q1403,Q1404,Q1405,Q1406,Q1407,Q1408,Q1409,Q1410,Q1411,Q1412,Q1413,Q1414,Q1415,Q1416,Q1417,Q1418,Q1419,Q1420,Q1421,Q1422,Q1423,Q1424,Q1425,Q1426,Q1427,Q1428,Q1429,Q1430,Q1431,Q1432,Q1433,Q1434,Q1435,Q1436,Q1437,Q1438,Q1439,Q1440,Q1441,Q1442,Q1443,Q1444,Q1445,Q1446,Q1447,Q1448,Q1449,Q1450,Q1451,Q1452,Q1453,Q1454,Q1455,Q1456,Q1457,Q1458,Q1459,Q1460,Q1461,Q1462,Q1463,Q1464,Q1465,Q1466,Q1467,Q1468,Q1469,Q1470,Q1471,Q1472,Q1473,Q1474,Q1475,Q1476,Q1477,Q1478,Q1479,Q1480,Q1481,Q1482,Q1483,Q1484,Q1485,Q1486,Q1487,Q1488,Q1489,Q1490,Q1491,Q1492,Q1493,Q1494,Q1495,Q1496,Q1497,Q1498,Q1499,Q1500,Q1501,Q1502,Q1503,Q1504,Q1505,Q1506,Q1507,Q1508,Q1509,Q1510,Q1511,Q1512,Q1513,Q1514,Q1515,Q1516,Q1517,Q1518,Q1519,Q1520,Q1521,Q1522,Q1523,Q1524,Q1525,Q1526,Q1527,Q1528,Q1529,Q1530,Q1531,Q1532,Q1533,Q1534,Q1535,Q1536,Q1537,Q1538,Q1539,Q1540,Q1541,Q1542,Q1543,Q1544,Q1545,Q1546,Q1547,Q1548,Q1549,Q1550,Q1551,Q1552,Q1553,Q1554,Q1555,Q1556,Q1557,Q1558,Q1559,Q1560,Q1561,Q1562,Q1563,Q1564,Q1565,Q1566,Q1567,Q1568,Q1569,Q1570,Q1571,Q1572,Q1573,Q1574,Q1575,Q1576,Q1577,Q1578,Q1579,Q1580,Q1581,Q1582,Q1583,Q1584,Q1585,Q1586,Q1587,Q1588,Q1589,Q1590,Q1591,Q1592,Q1593,Q1594,Q1595,Q1596,Q1597,Q1598,Q1599,Q1600,Q1601,Q1602,Q1603,Q1604,Q1605,Q1606,Q1607,Q1608,Q1609,Q1610,Q1611,Q1612,Q1613,Q1614,Q1615,Q1616,Q1617,Q1618,Q1619,Q1620,Q1621,Q1622,Q1623,Q1624,Q1625,Q1626,Q1627,Q1628,Q1629,Q1630,Q1631,Q1632,Q1633,Q1634,Q1635,Q1636,Q1637,Q1638,Q1639,Q1640,Q1641,Q1642,Q1643,Q1644,Q1645,Q1646,Q1647,Q1648,Q1649,Q1650,Q1651,Q1652,Q1653,Q1654,Q1655,Q1656,Q1657,Q1658,Q1659,Q1660,Q1661,Q1662,Q1663,Q1664,Q1665,Q1666,Q1667,Q1668,Q1669,Q1670,Q1671,Q1672,Q1673,Q1674,Q1675,Q1676,Q1677,Q1678,Q1679,Q1680,Q1681,Q1682,Q1683,Q1684,Q1685,Q1686,Q1687,Q1688,Q1689,Q1690,Q1691,Q1692,Q1693,Q1694,Q1695,Q1696,Q1697,Q1698,Q1699,Q1700,Q1701,Q1702,Q1703,Q1704,Q1705,Q1706,Q1707,Q1708,Q1709,Q1710,Q1711,Q1712,Q1713,Q1714,Q1715,Q1716,Q1717,Q1718,Q1719,Q1720,Q1721,Q1722,Q1723,Q1724,Q1725,Q1726,Q1727,Q1728,Q1729,Q1730,Q1731,Q1732,Q1733,Q1734,Q1735,Q1736,Q1737,Q1738,Q1739,Q1740,Q1741,Q1742,Q1743,Q1744,Q1745,Q1746,Q1747,Q1748,Q1749,Q1750,Q1751,Q1752,Q1753,Q1754,Q1755,Q1756,Q1757,Q1758,Q1759,Q1760,Q1761,Q1762,Q1763,Q1764,Q1765,Q1766,Q1767,Q1768,Q1769,Q1770,Q1771,Q1772,Q1773,Q1774,Q1775,Q1776,Q1777,Q1778,Q1779,Q1780,Q1781,Q1782,Q1783,Q1784,Q1785,Q1786,Q1787,Q1788,Q1789,Q1790,Q1791,Q1792,Q1793,Q1794,Q1795,Q1796,Q1797,Q1798,Q1799,Q1800,Q1801,Q1802,Q1803,Q1804,Q1805,Q1806,Q1807,Q1808,Q1809,Q1810,Q1811,Q1812,Q1813,Q1814,Q1815,Q1816,Q1817,Q1818,Q1819,Q1820,Q1821,Q1822,Q1823,Q1824,Q1825,Q1826,Q1827,Q1828,Q1829,Q1830,Q1831,Q1832,Q1833,Q1834,Q1835,Q1836,Q1837,Q1838,Q1839,Q1840,Q1841,Q1842,Q1843,Q1844,Q1845,Q1846,Q1847,Q1848,Q1849,Q1850,Q1851,Q1852,Q1853,Q1854,Q1855,Q1856,Q1857,Q1858,Q1859,Q1860,Q1861,Q1862,Q1863,Q1864,Q1865,Q1866,Q1867,Q1868,Q1869,Q1870,Q1871,Q1872,Q1873,Q1874,Q1875,Q1876,Q1877,Q1878,Q1879,Q1880,Q1881,Q1882,Q1883,Q1884,Q1885,Q1886,Q1887,Q1888,Q1889,Q1890,Q1891,Q1892,Q1893,Q1894,Q1895,Q1896,Q1897,Q1898,Q1899,Q1900,Q1901,Q1902,Q1903,Q1904,Q1905,Q1906,Q1907,Q1908,Q1909,Q1910,Q1911,Q1912,Q1913,Q1914,Q1915,Q1916,Q1917,Q1918,Q1919,Q1920,Q1921,Q1922,Q1923,Q1924,Q1925,Q1926,Q1927,Q1928,Q1929,Q1930,Q1931,Q1932,Q1933,Q1934,Q1935,Q1936,Q1937,Q1938,Q1939,Q1940,Q1941,Q1942,Q1943,Q1944,Q1945,Q1946,Q1947,Q1948,Q1949,Q1950,Q1951,Q1952,Q1953,Q1954,Q1955,Q1956,Q1957,Q1958,Q1959,Q1960,Q1961,Q1962,Q1963,Q1964,Q1965,Q1966,Q1967,Q1968,Q1969,Q1970,Q1971,Q1972,Q1973,Q1974,Q1975,Q1976,Q1977,Q1978,Q1979,Q1980,Q1981,Q1982,Q1983,Q1984,Q1985,Q1986,Q1987,Q1988,Q1989,Q1990,Q1991,Q1992,Q1993,Q1994,Q1995,Q1996,Q1997,Q1998,Q1999,Q2000,Q2001,Q2002,Q2003,Q2004,Q2005,Q2006,Q2007,Q2008,Q2009,Q2010,Q2011,Q2012,Q2013,Q2014,Q2015,Q2016,Q2017,Q2018,Q2019,Q2020,Q2021,Q2022,Q2023,Q2024,Q2025,Q2026,Q2027,Q2028,Q2029,Q2030,Q2031,Q2032,Q2033,Q2034,Q2035,Q2036,Q2037,Q2038,Q2039,Q2040,Q2041,Q2042,Q2043,Q2044,Q2045,Q2046,Q2047,Q2048,Q2049,Q2050,Q2051,Q2052,Q2053,Q2054,Q2055,Q2056,Q2057,Q2058,Q2059,Q2060,Q2061,Q2062,Q2063,Q2064,Q2065,Q2066,Q2067,Q2068,Q2069,Q2070,Q2071,Q2072,Q2073,Q2074,Q2075,Q2076,Q2077,Q2078,Q2079,Q2080,Q2081,Q2082,Q2083,Q2084,Q2085,Q2086,Q2087,Q2088,Q2089,Q2090,Q2091,Q2092,Q2093,Q2094,Q2095,Q2096,Q2097,Q2098,Q2099,Q2100,Q2101,Q2102,Q2103,Q2104,Q2105,Q2106,Q2107,Q2108,Q2109,Q2110,Q2111,Q2112,Q2113,Q2114,Q2115,Q2116,Q2117,Q2118,Q2119,Q2120,Q2121,Q2122,Q2123,Q2124,Q2125,Q2126,Q2127,Q2128,Q2129,Q2130,Q2131,Q2132,Q2133,Q2134,Q2135,Q2136,Q2137,Q2138,Q2139,Q2140,Q2141,Q2142,Q2143,Q2144,Q2145,Q2146,Q2147,Q2148,Q2149,Q2150,Q2151,Q2152,Q2153,Q2154,Q2155,Q2156,Q2157,Q2158,Q2159,Q2160,Q2161,Q2162,Q2163,Q2164,Q2165,Q2166,Q2167,Q2168,Q2169,Q2170,Q2171,Q2172,Q2173,Q2174,Q2175,Q2176,Q2177,Q2178,Q2179,Q2180,Q2181,Q2182,Q2183,Q2184,Q2185,Q2186,Q2187,Q2188,Q2189,Q2190,Q2191,Q2192,Q2193,Q2194,Q2195,Q2196,Q2197,Q2198,Q2199,Q2200,Q2201,Q2202,Q2203,Q2204,Q2205,Q2206,Q2207,Q2208,Q2209,Q2210,Q2211,Q2212,Q2213,Q2214,Q2215,Q2216,Q2217,Q2218,Q2219,Q2220,Q2221,Q2222,Q2223,Q2224,Q2225,Q2226,Q2227,Q2228,Q2229,Q2230,Q2231,Q2232,Q2233,Q2234,Q2235,Q2236,Q2237,Q2238,Q2239,Q2240,Q2241,Q2242,Q2243,Q2244,Q2245,Q2246,Q2247,Q2248,Q2249,Q2250,Q2251,Q2252,Q2253,Q2254,Q2255,Q2256,Q2257,Q2258,Q2259,Q2260,Q2261,Q2262,Q2263,Q2264,Q2265,Q2266,Q2267,Q2268,Q2269,Q2270,Q2271,Q2272,Q2273,Q2274,Q2275,Q2276,Q2277,Q2278,Q2279,Q2280,Q2281,Q2282,Q2283,Q2284,Q2285,Q2286,Q2287,Q2288,Q2289,Q2290,Q2291,Q2292,Q2293,Q2294,Q2295,Q2296,Q2297,Q2298,Q2299,Q2300,Q2301,Q2302,Q2303,Q2304,Q2305,Q2306,Q2307,Q2308,Q2309,Q2310,Q2311,Q2312,Q2313,Q2314,Q2315,Q2316,Q2317,Q2318,Q2319,Q2320,Q2321,Q2322,Q2323,Q2324,Q2325,Q2326,Q2327,Q2328,Q2329,Q2330,Q2331,Q2332,Q2333,Q2334,Q2335,Q2336,Q2337,Q2338,Q2339,Q2340,Q2341,Q2342,Q2343,Q2344,Q2345,Q2346,Q2347,Q2348,Q2349,Q2350,Q2351,Q2352,Q2353,Q2354,Q2355,Q2356,Q2357,Q2358,Q2359,Q2360,Q2361,Q2362,Q2363,Q2364,Q2365,Q2366,Q2367,Q2368,Q2369,Q2370,Q2371,Q2372,Q2373,Q2374,Q2375,Q2376,Q2377,Q2378,Q2379,Q2380,Q2381,Q2382,Q2383,Q2384,Q2385,Q2386,Q2387,Q2388,Q2389,Q2390,Q2391,Q2392,Q2393,Q2394,Q2395,Q2396,Q2397,Q2398,Q2399,Q2400,Q2401,Q2402,Q2403,Q2404,Q2405,Q2406,Q2407,Q2408,Q2409,Q2410,Q2411,Q2412,Q2413,Q2414,Q2415,Q2416,Q2417,Q2418,Q2419,Q2420,Q2421,Q2422,Q2423,Q2424,Q2425,Q2426,Q2427,Q2428,Q2429,Q2430,Q2431,Q2432,Q2433,Q2434,Q2435,Q2436,Q2437,Q2438,Q2439,Q2440,Q2441,Q2442,Q2443,Q2444,Q2445,Q2446,Q2447,Q2448,Q2449,Q2450,Q2451,Q2452,Q2453,Q2454,Q2455,Q2456,Q2457,Q2458,Q2459,Q2460,Q2461,Q2462,Q2463,Q2464,Q2465,Q2466,Q2467,Q2468,Q2469,Q2470,Q2471,Q2472,Q2473,Q2474,Q2475,Q2476,Q2477,Q2478,Q2479,Q2480,Q2481,Q2482,Q2483,Q2484,Q2485,Q2486,Q2487,Q2488,Q2489,Q2490,Q2491,Q2492,Q2493,Q2494,Q2495,Q2496,Q2497,Q2498,Q2499,Q2500,Q2501,Q2502,Q2503,Q2504,Q2505,Q2506,Q2507,Q2508,Q2509,Q2510,Q2511,Q2512,Q2513,Q2514,Q2515,Q2516,Q2517,Q2518,Q2519,Q2520,Q2521,Q2522,Q2523,Q2524,Q2525,Q2526,Q2527,Q2528,Q2529,Q2530,Q2531,Q2532,Q2533,Q2534,Q2535,Q2536,Q2537,Q2538,Q2539,Q2540,Q2541,Q2542,Q2543,Q2544,Q2545,Q2546,Q2547,Q2548,Q2549,Q2550,Q2551,Q2552,Q2553,Q2554,Q2555,Q2556,Q2557,Q2558,Q2559,Q2560,Q2561,Q2562,Q2563,Q2564,Q2565,Q2566,Q2567,Q2568,Q2569,Q2570,Q2571,Q2572,Q2573,Q2574,Q2575,Q2576,Q2577,Q2578,Q2579,Q2580,Q2581,Q2582,Q2583,Q2584,Q2585,Q2586,Q2587,Q2588,Q2589,Q2590,Q2591,Q2592,Q2593,Q2594,Q2595,Q2596,Q2597,Q2598,Q2599,Q2600,Q2601,Q2602,Q2603,Q2604,Q2605,Q2606,Q2607,Q2608,Q2609,Q2610,Q2611,Q2612,Q2613,Q2614,Q2615,Q2616,Q2617,Q2618,Q2619,Q2620,Q2621,Q2622,Q2623,Q2624,Q2625,Q2626,Q2627,Q2628,Q2629,Q2630,Q2631,Q2632,Q2633,Q2634,Q2635,Q2636,Q2637,Q2638,Q2639,Q2640,Q2641,Q2642,Q2643,Q2644,Q2645,Q2646,Q2647,Q2648,Q2649,Q2650,Q2651,Q2652,Q2653,Q2654,Q2655,Q2656,Q2657,Q2658,Q2659,Q2660,Q2661,Q2662,Q2663,Q2664,Q2665,Q2666,Q2667,Q2668,Q2669,Q2670,Q2671,Q2672,Q2673,Q2674,Q2675,Q2676,Q2677,Q2678,Q2679,Q2680,Q2681,Q2682,Q2683,Q2684,Q2685,Q2686,Q2687,Q2688,Q2689,Q2690,Q2691,Q2692,Q2693,Q2694,Q2695,Q2696,Q2697,Q2698,Q2699,Q2700,Q2701,Q2702,Q2703,Q2704,Q2705,Q2706,Q2707,Q2708,Q2709,Q2710,Q2711,Q2712,Q2713,Q2714,Q2715,Q2716,Q2717,Q2718,Q2719,Q2720,Q2721,Q2722,Q2723,Q2724,Q2725,Q2726,Q2727,Q2728,Q2729,Q2730,Q2731,Q2732,Q2733,Q2734,Q2735,Q2736,Q2737,Q2738,Q2739,Q2740,Q2741,Q2742,Q2743,Q2744,Q2745,Q2746,Q2747,Q2748,Q2749,Q2750,Q2751,Q2752,Q2753,Q2754,Q2755,Q2756,Q2757,Q2758,Q2759,Q2760,Q2761,Q2762,Q2763,Q2764,Q2765,Q2766,Q2767,Q2768,Q2769,Q2770,Q2771,Q2772,Q2773,Q2774,Q2775,Q2776,Q2777,Q2778,Q2779,Q2780,Q2781,Q2782,Q2783,Q2784,Q2785,Q2786,Q2787,Q2788,Q2789,Q2790,Q2791,Q2792,Q2793,Q2794,Q2795,Q2796,Q2797,Q2798,Q2799,Q2800,Q2801,Q2802,Q2803,Q2804,Q2805,Q2806,Q2807,Q2808,Q2809,Q2810,Q2811,Q2812,Q2813,Q2814,Q2815,Q2816,Q2817,Q2818,Q2819,Q2820,Q2821,Q2822,Q2823,Q2824,Q2825,Q2826,Q2827,Q2828,Q2829,Q2830,Q2831,Q2832,Q2833,Q2834,Q2835,Q2836,Q2837,Q2838,Q2839,Q2840,Q2841,Q2842,Q2843,Q2844,Q2845,Q2846,Q2847,Q2848,Q2849,Q2850,Q2851,Q2852,Q2853,Q2854,Q2855,Q2856,Q2857,Q2858,Q2859,Q2860,Q2861,Q2862,Q2863,Q2864,Q2865,Q2866,Q2867,Q2868,Q2869,Q2870,Q2871,Q2872,Q2873,Q2874,Q2875,Q2876,Q2877,Q2878,Q2879,Q2880,Q2881,Q2882,Q2883,Q2884,Q2885,Q2886,Q2887,Q2888,Q2889,Q2890,Q2891,Q2892,Q2893,Q2894,Q2895,Q2896,Q2897,Q2898,Q2899,Q2900,Q2901,Q2902,Q2903,Q2904,Q2905,Q2906,Q2907,Q2908,Q2909,Q2910,Q2911,Q2912,Q2913,Q2914,Q2915,Q2916,Q2917,Q2918,Q2919,Q2920,Q2921,Q2922,Q2923,Q2924,Q2925,Q2926,Q2927,Q2928,Q2929,Q2930,Q2931,Q2932,Q2933,Q2934,Q2935,Q2936,Q2937,Q2938,Q2939,Q2940,Q2941,Q2942,Q2943,Q2944,Q2945,Q2946,Q2947,Q2948,Q2949,Q2950,Q2951,Q2952,Q2953,Q2954,Q2955,Q2956,Q2957,Q2958,Q2959,Q2960,Q2961,Q2962,Q2963,Q2964,Q2965,Q2966,Q2967,Q2968,Q2969,Q2970,Q2971,Q2972,Q2973,Q2974,Q2975,Q2976,Q2977,Q2978,Q2979,Q2980,Q2981,Q2982,Q2983,Q2984,Q2985,Q2986,Q2987,Q2988,Q2989,Q2990,Q2991,Q2992,Q2993,Q2994,Q2995,Q2996,Q2997,Q2998,Q2999,Q3000,Q3001,Q3002,Q3003,Q3004,Q3005,Q3006,Q3007,Q3008,Q3009,Q3010,Q3011,Q3012,Q3013,Q3014,Q3015,Q3016,Q3017,Q3018,Q3019,Q3020,Q3021,Q3022,Q3023,Q3024,Q3025,Q3026,Q3027,Q3028,Q3029,Q3030,Q3031,Q3032,Q3033,Q3034,Q3035,Q3036,Q3037,Q3038,Q3039,Q3040,Q3041,Q3042,Q3043,Q3044,Q3045,Q3046,Q3047,Q3048,Q3049,Q3050,Q3051,Q3052,Q3053,Q3054,Q3055,Q3056,Q3057,Q3058,Q3059,Q3060,Q3061,Q3062,Q3063,Q3064,Q3065,Q3066,Q3067,Q3068,Q3069,Q3070,Q3071,Q3072,Q3073,Q3074,Q3075,Q3076,Q3077,Q3078,Q3079,Q3080,Q3081,Q3082,Q3083,Q3084,Q3085,Q3086,Q3087,Q3088,Q3089,Q3090,Q3091,Q3092,Q3093,Q3094,Q3095,Q3096,Q3097,Q3098,Q3099,Q3100,Q3101,Q3102,Q3103,Q3104,Q3105,Q3106,Q3107,Q3108,Q3109,Q3110,Q3111,Q3112,Q3113,Q3114,Q3115,Q3116,Q3117,Q3118,Q3119,Q3120,Q3121,Q3122,Q3123,Q3124,Q3125,Q3126,Q3127,Q3128,Q3129,Q3130,Q3131,Q3132,Q3133,Q3134,Q3135,Q3136,Q3137,Q3138,Q3139,Q3140,Q3141,Q3142,Q3143,Q3144,Q3145,Q3146,Q3147,Q3148,Q3149,Q3150,Q3151,Q3152,Q3153,Q3154,Q3155,Q3156,Q3157,Q3158,Q3159,Q3160,Q3161,Q3162,Q3163,Q3164,Q3165,Q3166,